THE RICE INSTITUTE

I: FROZEN MOMENTS IN A SUPERCONDUCTOR
II: GYROMAGNETIC EFFECT IN A SUPERCONDUCTOR

by

Arthur L. Lathrop

A THESIS

SUBMITTED TO THE FACULTY

IN PARTIAL FULFILLMENT OF THE

REQUIREMENTS FOR THE DEGREE OF

DOCTOR OF PHILOSOPHY

Houston, Texas
May, 1952

Approved: G. F. Bacine

UMI Number: 3079764

UMI®

UMI Microform 3079764

ProQuest Information and Learning Company
300 North Zeeb Road
P.O. Box 1346
Ann Arbor, MI 48106-1346

ACKNOWLEDGEMENTS

The author wishes to express his appreciation for the encouragement and guidance of Professors C. F. Squire and W. V. Houston under whose supervision the work was carried out. He is also indebted to Visiting Professor K. Mendelssohn of Oxford University for his helpful suggestions. All of the members of the Low Temperature Laboratory helped to carry out the experimental operations. The members of the Physics Shop, and Mr. Earl Harmening in particular, are to be thanked for the precise work done in milling the tin sphere and on construction of the equipment.

TABLE OF CONTENTS

PREFACE

The first section of this thesis reports the results of experiments performed to measure the frozen magnetic moment in a solid tin sphere in the superconducting state. The pure tin sphere was hung by a fiber to form a torsion pendulum such that period measurements gave the magnetic moment.

We have shown the following results:

(1) When the superconducting state is entered at constant temperature, the frozen moment is very nearly a quadratic function of the critical field B_c.

(2) When the superconducting state is entered at constant field, the frozen moment is not a "smooth" function of the forming field. In the region near zero field the moment increases very rapidly with increasing forming fields. The change in the moment is virtually discontinuous.

(3) The percentage of the forming field that was frozen into the sample was less than 1% in most cases. In one constant temperature case only 1/6 of 1% of the critical field B_c was frozen into the sample.

(4) The damping action of the frozen moment was so small that at first it remained undetected.

The second section reports an experiment on the gyromagnetic effect in a superconductor. The gyromagnetic ratio of a superconducting tin sphere was measured by the Einstein-De Haas method. The result is approximately that to be expected

on the picture of perfectly free superconducting electrons and is in agreement with the work of Kikoin and Gubar.

PART I. INTRODUCTION[1]

The Historical Experiments of Onnes & Meissner

In 1911, only three years after the first liquifaction of helium, superconductivity was discovered by H. K. Onnes.[2] Onnes was concerned with the study of electrical resistance of the metallic elements, and chose to work with a sample of mercury because of the relative ease of preparing a pure specimen. He then observed that the resistance of his mercury virtually disappeared when the temperature of the sample was reduced below 4.1° Kelvin. The choice of mercury metal was a particularly fortunate one, as most common metals will not exhibit this spectacular property.

The first evidence of the peculiar magnetic properties of superconductors appeared a few years later, when it was learned that a superconducting metal can be made to have an ohmic resistance if the magnetic field is raised above some critical value which is a function of temperature.[3] It is now known that this critical field for mercury varies from about 400 gauss near the absolute zero of temperature to a vanishingly small field at 4.1° K. For superconducting tin the corresponding figures are 300 gauss and 3.7° K. The superconducting state can then be represented by an area in H - T space that is bounded by a curve of nearly parabolic shape. H and T refer respectively to the magnetic field intensity and the temperature. The plot of this critical field function for tin is shown in figure 5.

A better understanding of the magnetic properties of superconductors became possible after the historic experiments of Meissner and Oschenfeld.[4] These workers found that a superconductor can be described as being perfectly diamagnetic; that is, the flux of magnetic induction B inside of superconducting material is always zero, regardless of whether the superconducting state is entered by changing the magnetic field or by changing the temperature. It is interesting to note why this exclusion of flux, or Meissner effect as it is now called, was not discovered before 1933. There is now abundant experimental evidence that the appearance of a Meissner-effect is extremely dependent on metallic purity. Commercial grade metals show practically no Meissner effect, and even some chemically pure metals show only a little effect. However, for "spectroscopically pure" metals, this exclusion of the flux may be over 99% complete. We now regard the Meissner effect to be a necessary part of the description of an "ideal" superconductor; that is, superconductors that are completely free from chemical contamination and irregular crystal structure.

Perfect Conductivity and Superconductivity

In order to understand better the importance of the Meissner effect, it is worthwhile to consider the consequences of the assumption that superconductors are perfect conductors and nothing more. For a perfect conductor the electric field intensity E must everywhere vanish if we are to avoid having

infinite current densities. From Maxwell's equation $\dot{B} = -$ curl E, it follows that $\dot{B} = 0$. Hence a superconductor would have the property of perfect shielding, and the induction B at any point would always be equal to the value it had when the specimen last entered the superconducting state. This result is clearly in conflict with the Meissner effect. As we shall see, though, diamagnetism in this case does not imply the existence of magnetization on the atomic level, but rather the existence of current loops of gross size. If we confined our attention to simply connected bodies either point of view would be acceptable, but the current loop picture is the only one that explains the experimental results with multiply connected bodies such as a torus or a sphere with a diametrical hole cut in it.

Hysteresis Effects on Simply Connected Bodies

If the perfect Meissner effect were observed, any transitions between the normal and the superconducting states would be reversible. However, experiments show only an approximation to this ideal condition. Two types of experiments that demonstrate the existence of magnetic hysteresis will be mentioned here; (1) experiments at constant temperature in which either the magnetization I or induction B_i inside the superconductor is measured as a function of the externally applied field H_o (for example, in figure 5, H_o follows the path F e D C B A and reverses A B C D e F), and (2) experiments with a constant external field in which I or B_i is measured as a func-

tion of temperature (in figure 5 the temperature follows the path f e d c b a and reverses a b c d e f). Considerable work has been done only with the first of these two types of experiments, and so most of the attention here is directed to a discussion of a few hysteresis experiments of this type. First, though, it will be best to see how far the hypothesis of perfect diamagnetism would enable one to predict the results of experiments on spherical bodies.

A solid permeable sphere in a uniform magnetic field will distort the field at its surface. Let the local field inside the sphere be H_i and the external field at a distance from the sphere be H_o. Then, according to the results of the well known magneto statics boundary value problem, $H_i = (3/\mu + 2)H_o$. For the case of a simply connected superconductor, $\mu = 0$, and so $H_i = 3/2\ H_o$. If we call the critical field for the destruction of superconductivity H_c, then if $H_o < 2/3\ H_c$ the ball is entirely superconducting. Then we have these unique results: $H_i = 3/2\ H_o$, $B_i = 0$, and $4\pi I = -3/2\ H_o$. I, of course, represents the magnetization or magnetic moment per unit volume. For the greater fields, if $H_o > H_c$, the ball is a normal conductor leading to the obvious results: $H_i = H_o$, $B_i = H_i$, and $4\pi I = 0$. For the intermediate fields $2/3\ H_c < H_o < H_c$, the effective permeability is changing in some manner between the value 0 and the value 1, and from the consideration of these magnetic equations alone* no unique solution can be deduced.

* From thermodynamic considerations, Peierls[7] predicted correctly that in the intermediate state, I varies linearly with H_o.

In this region of fields the sphere is said to be in the intermediate state because it clearly cannot be wholly in the superconducting state or wholly in the normal state. The results of the theory are shown on the graphs in figure 1 along with the experimental results of Shoenberg[5] and de Haas[6] whose experiments are described here.

Shoenberg measured the magnetization of a lead sphere by the common method of observing the force exerted on the sample by a slightly non-uniform field. Measurements were made for a large number of field intensities increasing from $H_o = 0$ in the superconducting state to $H_o > H_c$ in the normal state. Then hysteresis was demonstrated by repeating the measurements with decreasing fields that approached zero and then were run in the opposite direction. Three points of interest are particularly to be noted: (1) With increasing fields, the results agree with the theory outlined here, and I is a linear function of H_o in the intermediate state as predicted by Peierls;[7] (2) With decreasing fields, hysteresis effects begin to appear at about $H_o = 0.71\ H_c$ (point e); (3) The interpolated value corresponding to $H_o = 0$ shows a finite positive value for I. Corresponding to this remanent magnetization the "frozen field of induction" is 3% of B_c. It is also interesting to note that the method used by Shoenberg does not enable one to draw a distinction between induced and permanent magnetization, where permanent magnetization is regarded as staying fixed in the ball, even if the ball is rotated with respect to the field.

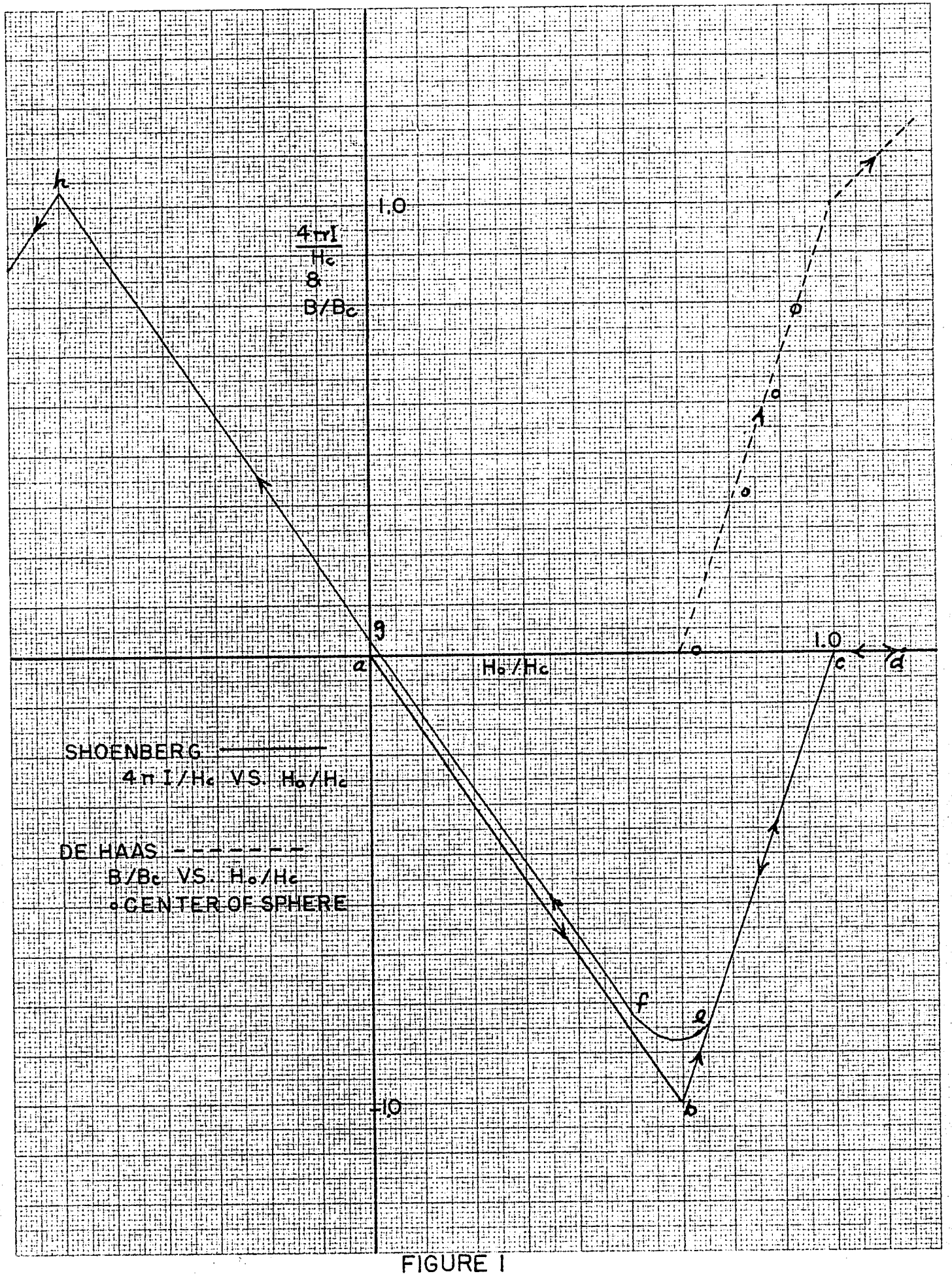
h
1.0
4πI/Hc
&
B/Bc
φ
o
g
a
Ho/Hc
1.0
c
d
SHOENBERG
4πI/Hc VS. Ho/Hc
DE HAAS
B/Bc VS. Ho/Hc
o CENTER OF SPHERE
f
e
-1.0
b

FIGURE I

Naturally we expect that the magnetization represented by the ordinate at $H_o = 0$ is such a permanent magnetization; but for any other value of H_o such a distinction cannot be made. It is true that in the particular curve drawn here the line f g h is parallel to the virgin curve a b, leading one to expect that the magnetization represented by the ordinate a g would be permanent. This, in fact, probably is the case for this pure sample used in Shoenberg's work; but in general hysteresis loops do not have this simplifying character. The original measurements reported later in this thesis are unambiguous in this respect.

De Haas and Guinau[6] made use of the magnetoresistance of a small bismuth wire in order to make direct field measurements on the surface and inside a sphere. In their case, the tin sample actually consisted of two hemispheres separated by only 0.3 millimeter. The plane of the cut was perpendicular to the direction of the external field. Four bismuth wire probes were placed at different positions between the edge of the sphere and the center. The results of this experiment were wholly in accord with those of Shoenberg except for a few data points corresponding to measurements made at the center of the sphere. The induction B_i was a linear function of H_o in the intermediate state. The description of the occurrence of hysteresis is not given in this paper as it was by Shoenberg. These two experiments indicate that in the intermediate state, the spheres act very nearly as if the effective permeability

were varying linearly with H_o. The fact that the four probes in de Haas' experiment did not give exactly the same results serves as evidence that the field penetration is not strictly uniform. This is the fact, and this point will be treated in detail later.

Some information about the second kind of hysteresis (i.e., constant external field with varying temperature) can be found in the previously mentioned paper by de Haas[6] and in another by Mendelssohn.[8] De Haas worked with two hemispheres and a bismuth probe. Mendelssohn worked with a long ellipsoid of mercury and a slip coil to measure the field. One point can be made from these experiments. The critical field curve can be used to relate the varying temperature to a varying value of H_c. In figure 5, for example, point b corresponds to the condition $H_o/H_c = 0.95$; and at point d $H_o/H_c = 0.73$. In this way, the constant external field H_o corresponds to a varying value of the ratio H_o/H_c. If this is done, the process of changing the magnetization by increasing the temperature seems to be roughly similar to the process already described of changing the magnetization by changing the value of H_o at constant temperature. A marked hysteresis occurred in both experiments leading to a frozen flux of induction when the temperature was again reduced. The experiments do not suggest any systematic interpretation of the nature of the two different ways of producing a frozen magnetic moment.

The preceding paragraphs outline what is known about hysteresis effects in transitions between the superconducting

and normal states in simply connected bodies. It is now necessary to survey what is known about the detailed manner in which the flux of induction penetrates such bodies as the intermediate state is entered.

The Gradual Penetration of the Field in the Intermediate State

The remarkable work of Meshkovsky and Shalnikov[9] gives a rather good picture of the detailed process of penetration of a field into a sphere. These workers used the bismuth probe method with hemispheres of over one inch diameter. Their paper summarizes the results of seventeen experiments in which detailed consideration was given to such points as the slit width separating the hemispheres and the physical size of the bismuth wire. Using bismuth wires only .005 m.m. thick and 2 m.m. long, they found that in the transition at constant temperature from the superconducting to the normal state, the flux of induction B_i did not appear at the center of the sphere when $H_o = 2/3\ H_c$, but only after H_o was raised to about $3/4\ H_c$. Measurements made with a larger size wire showed only a homogeneous field in the slit. Clearly, the conclusion to be drawn is that the average value of the induction and magnetization inside the sphere is just what Shoenberg's earlier experiments indicated. However, the spatial distribution is not uniform; the flux tends to penetrate in bunches forming lamina or threads of normal conducting metal in the body of the metal which is otherwise superconducting.

In further experiments with a moveable probe these results are obtained: The actual variations in field strength are measured and nearly a hundred sharp peaks and valleys appear in the field function as the probe moves across a diameter. When the intermediate state is entered at constant temperature, these peaks are relatively broad and unevenly spaced. In this case, the field penetrates into the center only for values of H_o which approach 0.70 to 0.75 H_c. None of the curves show the remanent magnetization present after reducing the field. When the intermediate state is entered at constant field strength by varying the temperature, the peaks and valleys are narrow, sharp, and evenly spaced. In this case the frozen field lines are also shown and seem to be distributed evenly across the diameter as well as one can tell from only a few bundles of flux. Apparently, these two different ways of cutting across the intermediate state and forming a frozen field are different in detail and do not permit any close comparison.

These results of Meshkovsky and Shalnikov are in general agreement with a theory of the intermediate state proposed by Landau.[10] According to this theory, the microscopic field at any point in a superconductor in the intermediate state is either zero or Bc with the average value of the induction assuming some intermediate value which is consistent with the earlier findings of Shoenberg. Also if the superconductor is close to the normal state (point c or C in figure 5), there are a few scattered threads of superconducting material in

the body of normally conducting metal. Conversely, if the metal is close to the superconducting boundary (point d or D in figure 5), only a few threads of normally conducting material run through the body. Although Landau's theory does not specifically make predictions about the nature of the formation of frozen flux, it seems natural to expect that on crossing into the superconducting state, the last few threads of normal conducting material do not vanish but remain locked in the lattice.

The survey of experimental work given so far has dealt only with simply connected bodies. For these bodies the ideal behavior could be predicted by making the assumption $\mu = 0$, and then solving the problem by the methods of ordinary magnetostatics. Also, the hypothesis of ideal behavior would never lead to the result of a frozen moment. In the following paragraphs, the experimental evidence dealing with multiply connected bodies will be treated.

Hysteresis Effects in Multiply Connected Bodies

De Haas and Guinau[11] performed an experiment on a tin sphere using the bismuth probe technique. The sphere was drilled along a diameter making a small cylindrical hole or canal, as they called it. The experiment consisted of measuring the field of induction in the canal as a function of the external field, H_o, which was parallel to the canal. The results are shown in figure 2.

The interesting features of the experimental results are these. (1) The field does not appear in the canal at $H_o =$

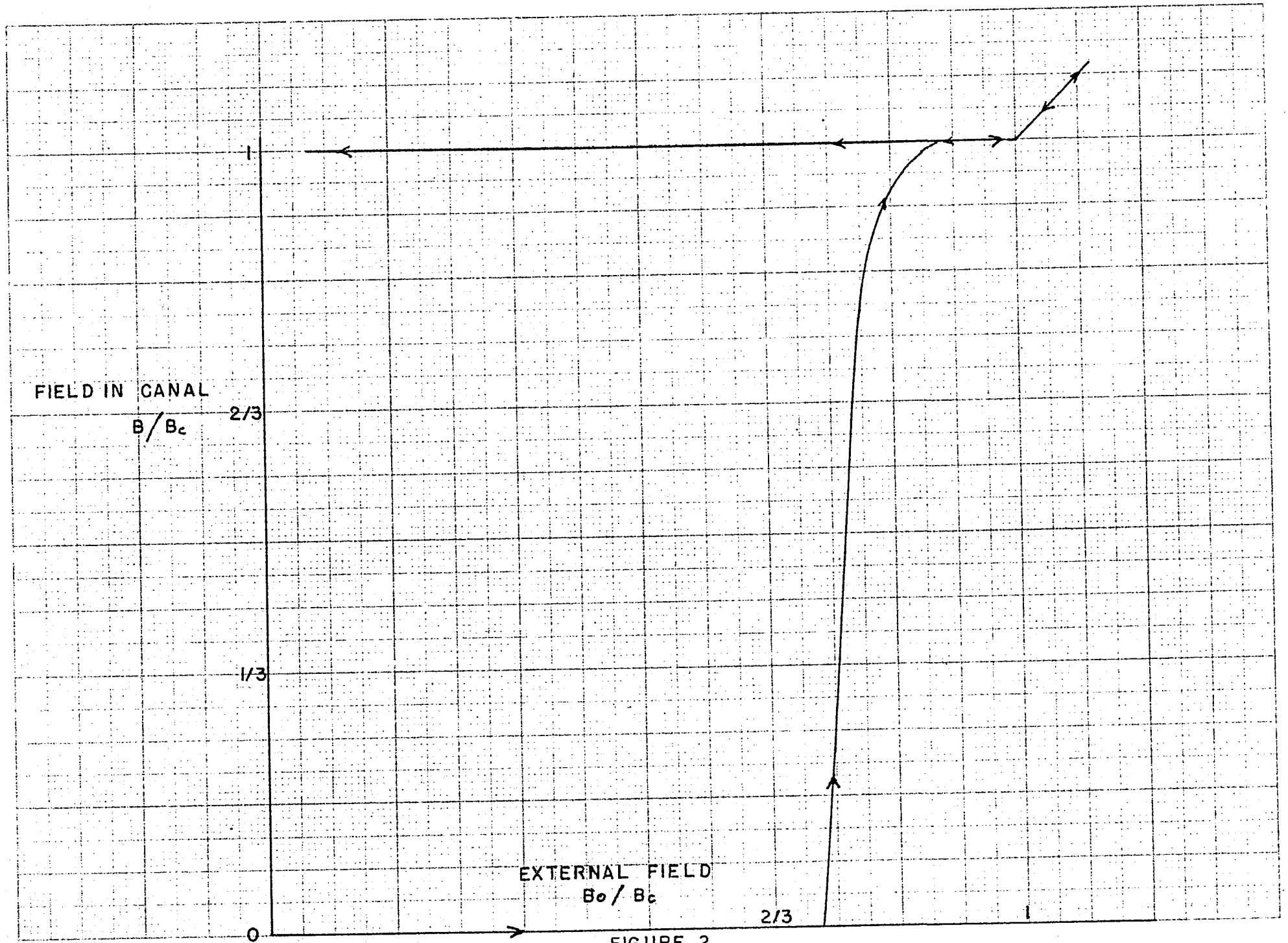

FIGURE 2

2/3 H_c but only after H_o has been raised to about 3/4 H_c. This is in general agreement with the experiments of Meshkovsky[9] with the double hemispheres. (2) The induction B in the canal changes from zero to the critical value in a very short range of the variable H_o. (3) With decreasing fields the induction in the canal never falls below the critical value. In this case we have a result with pure metal that can be seen in simply connected bodies only when the metal is quite impure.

The same method was used to explore the transition into the superconducting state when the external field was kept constant and the temperature lowered. In this case, the field in the canal spontaneously increased as the temperature was lowered, acting as if it were at all times trying to keep up with the constantly increasing critical field. The field, however, does not reach its final maximum value when the temperature is lowered enough to cross the 2/3 B_c line, the critereon one would ordinarily set for the transition from the intermediate to the superconducting state. The field instead continues to increase at a slower rate as the temperature drops another one or two tenths of a degree. No explanation is offered and there is no evidence that the authors recognized a problem to exist. This may be evidence of a supercooling effect.

A second experiment of particular interest is reported by Shoenberg.[5] In connection with his group of experiments reported earlier on lead spheres, he also made one measurement of the hysteresis loop I vs. H_o of a toroidal lead ring. Many of the features of the hysteresis loop were similar to

those of an impure lead sphere. All of the magnetization observed in this case was not fixed in the torus. When the direction of the field was moved through 90° relative to the torus and then brought back to the original position, the moment was not the same.

One of the most important observations that is to be made of these experiments with multiply connected bodies is the fact that the important features can be predicted on the basis of the theory of ideal superconductivity. In the case of the simply connected bodies, the theory would not predict any of the hysteresis effects that were observed. As mentioned before, the appropriate theory for multiply connected bodies is not so simple that the single assumption $\mu = 0$ is sufficient. The London[1] theory combines in a single electrodynamic equation the physical description of an effective diamagnetism due to current loops, and also the physical description of perfect conductivity. This theory applies equally well to simply connected and multiply connected bodies. When applied to the problem of the torus by de Launay[12] the results are in close agreement with Shoenberg's measurements. The suggestion that one might take from these facts is that some properly chosen multiply connected body can serve as a rough model of a body with a frozen moment. For example, the sphere with a small hole drilled through it might approximate closely the behavior of another sphere with a fairly large frozen moment caused by impurities.

PART II. FROZEN MAGNETIC MOMENTS

In the first part, a discussion is given of the background of superconductivity with special attention to the problem of the intermediate state. It appeared that the existence of a frozen moment in a superconductor was evidence of a failure to realize experimentally the condition of thermodynamic reversibility that "ideally" should exist. Actually, though, we do not really know just what the realization of this "ideal" demands. We do not know in detail what physical processes lead to a greater or smaller frozen moment. It is necessary to see just how much is known on the basis of present experimental knowledge. The importance of metallic purity is well established. We also know that the smallest frozen moments appear when the test body approaches in shape a perfect sphere or ellipsoid.

Shoenberg[5] collected some evidence of the effect of metallic impurities. He made an alloy of 1.5% bismuth in lead, carried out a magnetization experiment of the same kind mentioned in the last section. The result was a very large frozen field and virtually no Meissner effect. Since the war more complete studies of alloys with varying percentages of non-superconducting materials have been made. There is clear evidence that the gradual addition of impurities quickly destroys the appearance of a Meissner effect. The impurities seem to effectively change the simply connected body into a body with "holes" in it. Such bodies have frozen moments the direction

of which is determined by the location of the normal conducting - superconducting interfaces. Frozen moments exist providing the superconducting state was not entered at zero field.

Shoenberg[5,13] has found evidence that the existence of a frozen moment is an essential topological feature of the sample being tested. He found that a cast spherical single crystal of lead had twice the frozen moment of another multicrystal sphere. This result is clearly in conflict with the idea that single crystals have a more complete Meissner effect. The single crystal, however, due to the method of casting, had a less nearly perfect spherical shape. In another experiment he observed that the large frozen moment that appeared in a short cylinder was greatly reduced when the sharp edges of the cylinder were rounded off. Considering this experimental evidence, and the theoretical investigation of Peierls,[7] Shoenberg considered it likely that only an ellipsoid or sphere could ever show a complete Meissner effect. Before finally accepting this interpretation, it would be well to consider one question. Does the greater frozen moment occur in the short cylinder because of its non-ellipsoidal shape, or only because the local field H_i near the sharp edges in such a body is so very much greater than is the uniform field in the inscribed ellipsoid?

Our present knowledge of frozen moments has come mainly as a by-product of investigations directed primarily to more fundamental problems of the intermediate state. Much more can be learned if experiments are designed and performed with

the specific purpose in mind of clarifying these problems that have appeared concerning the nature of frozen moments. To satisfy this need a torsion pendulum measurement technique has been employed that permits one to measure both the magnitude and direction of a frozen moment. It also permits one to separate fixed moments from induced moments and to observe irreversible processes that occur when the body is rotated in a magnetic field.

PART III. THE EXPERIMENTAL EQUIPMENT

The torsion pendulum and Helmholtz field coil are shown in a schematic diagram figure 3. The solenoid shown was not used in the frozen moment experiments. The test piece which serves as the largest part of the moment of inertia of the system is a tin sphere with a diameter 1.0000 ± .0002 inches. The tin sphere is enclosed in a lucite holder resting on a conical seat. The differential contraction between the tin and lucite does not permit the use of a tight holder without putting severe strains on the tin sphere, and so for this reason the holder with the conical seat is made intentionally loose. This assembly, which is at liquid helium temperature, is connected to a glass tube which extends to the top of the dewar flask at room temperature. The connection between this glass tube and the torsion fibre is made by a two piece lucite cylinder. The lower piece is a threaded nut which compresses two O-rings to make a detachable connection between the glass rod and the cylindrical blocks. The upper cylinder has an octagonal cross-section on which eight mirrors are attached, each with an area of one square centimeter. The mirrors are good quality front surface mirrors which, together with the optical glass windows form a good system for measuring the oscillations of the system.

The torsion fibre is 75 centimeters long, and made of tungsten wire .003 inches in diameter. This fibre has a torsion constant of only 7 dyne cm. torque per radian of angular displacement which makes it exceedingly sensitive to the small

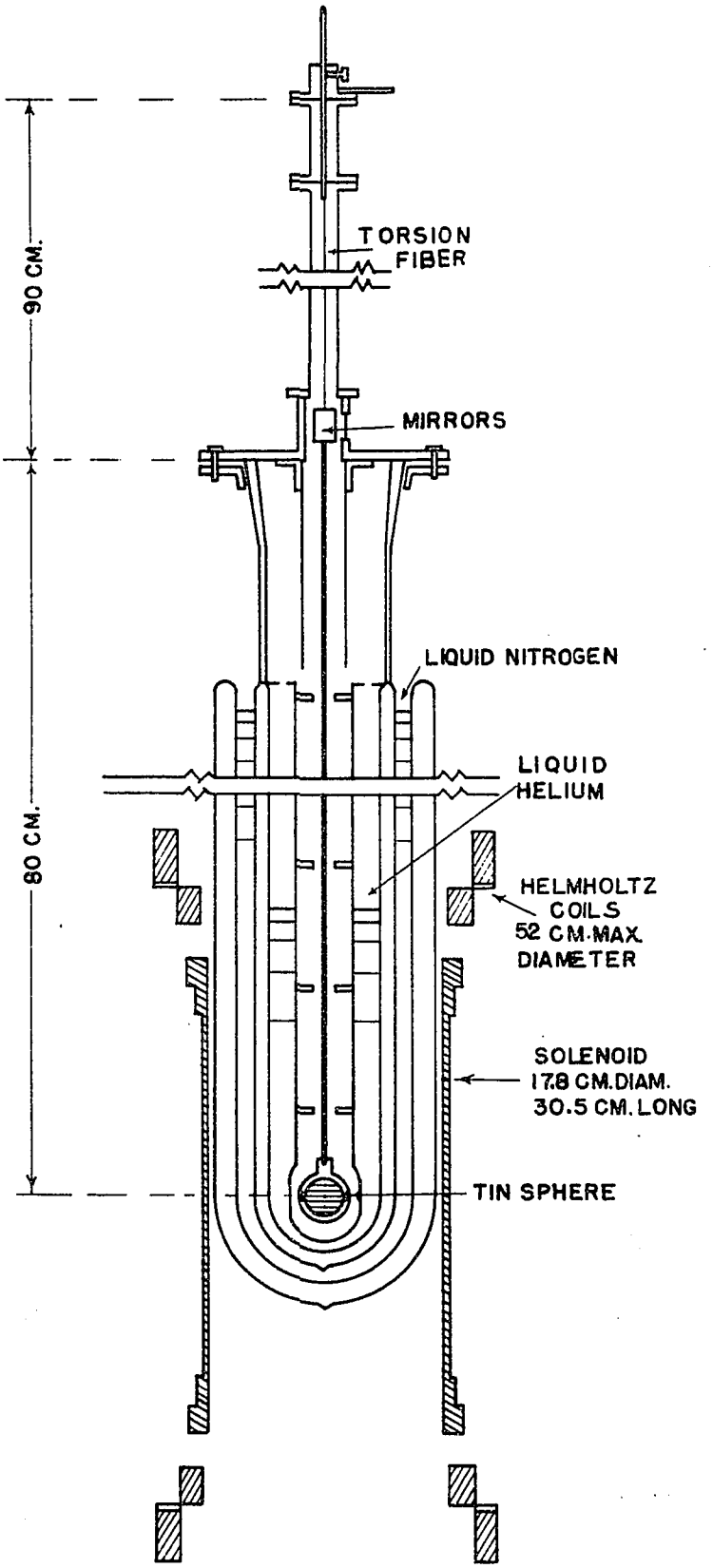
90 CM.
80 CM.
TORSION
FIBER
MIRRORS
LIQUID NITROGEN
LIQUID
HELIUM
HELMHOLTZ
COILS
52 CM. MAX.
DIAMETER
SOLENOID
17.8 CM. DIAM.
30.5 CM. LONG
TIN SPHERE

FIGURE 3

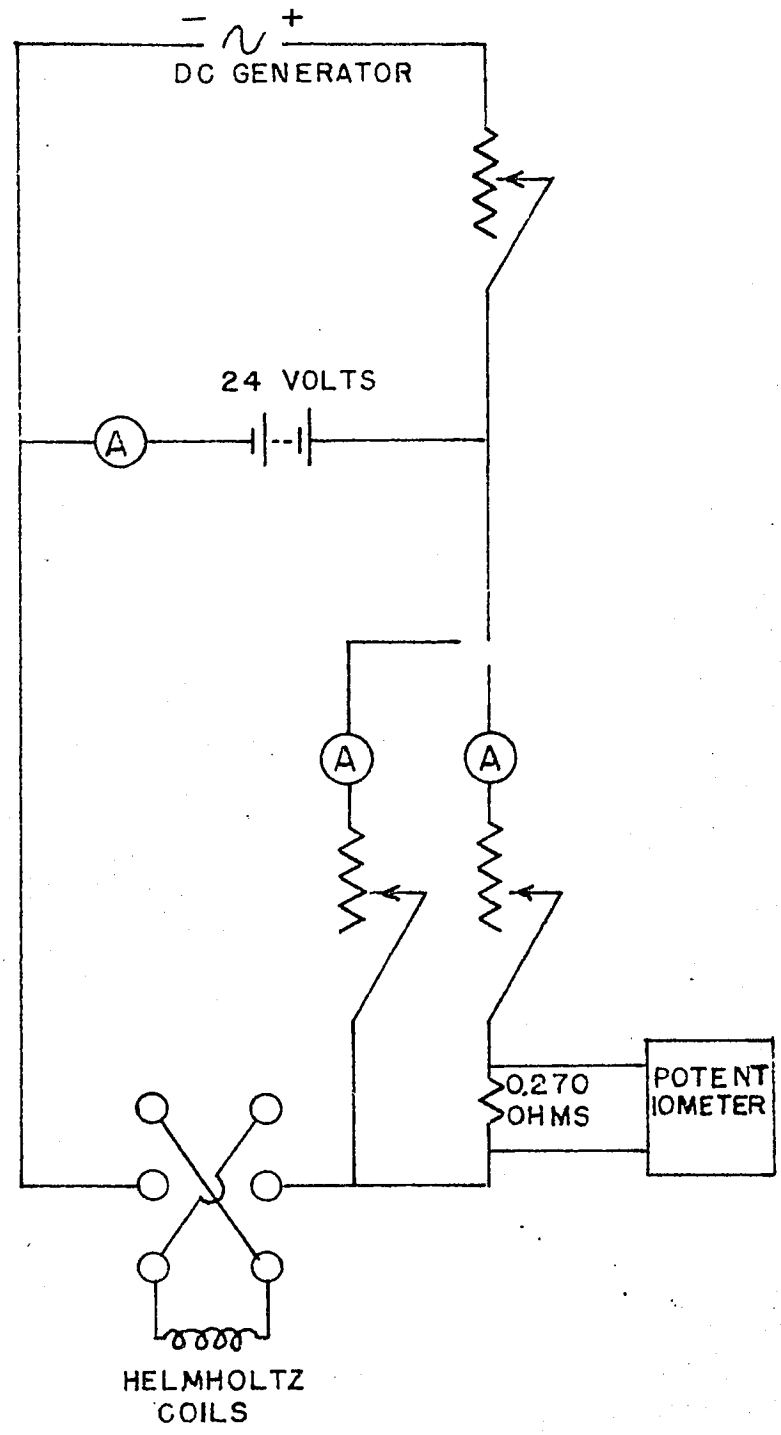
DC GENERATOR
24 VOLTS
A
A
A
0.270
OHMS
POTENT
IOMETER
HELMHOLTZ
COILS

FIGURE 4

torques that were to be measured. The tungsten wire is soldered to a vertical brass rod which passes through a vacuum tight stuffing box to the outside. A set screw and rotating plate arrangement permits one to make small angular rotations of the upper suspension. Good control is possible for rotations of about 10^{-3} radians. Not shown in the diagram is a mirror attached to this brass rod which enables one to measure the angular position of the upper support.

The Helmholtz coil has been described in considerable detail elsewhere.[14] It produces a field of 11.1 gauss per ampere which is non-uniform by only a few parts in a thousand over the volume of the sphere. The coil assembly can easily produce fields of over 100 gauss without overheating. For short periods of time almost double this field can be produced, and in these experiments the largest fields are needed for only about two minutes. The coils are fed with current from a direct current generator with very low ripple. The generator can supply 17 to 18 amperes to the coils which, together with the lead wires, have a resistance of about 8 ohms. As shown in the circuit diagram figure 4, the current supply lines are shunted by a 24 volt lead cell battery which is used to reduce the effect of the generator fluctuations at the coils. The control circuit shows separate controls for high and low currents, the 24 volt battery being disconnected when large currents are used. The large currents are used to freeze in the moment, and precise control of fluctuations is not needed. Only two amperes or less are used for the moment measuring fields, and

for this purpose the 24 volt battery provides fairly good stability.

The pumping line for controlling the helium vapor pressure is completely orthodox and is not diagrammed. A large bore rubber tube passes from the top plate of the dewar flask assembly through a manostat to an ordinary vacuum pump. The manostat is a commercially made air leak device which automatically controls the pressure to a pre-set level. This device has distinct disadvantages for laboratory uses of this type, but is safe as long as the helium vapor pressure is not increasing. Unless the pumping line is pinched off upward, adjustments in the pressure cannot be made without leaking atmospheric air through the manostat into the dewar flask.

The mercury manometer which is used to measure the vapor pressure is connected to a separate outlet on the brass plate. A safety device used was a mercury bubbler taken off of the pumping line. This automatically vented any over-pressure of helium gas after the hoses were connected, and never permitted the entry of atmospheric air. Another small device not shown in the diagram is a 600 ohm radio resistor, which was placed in the helium bath and connected to the outside by means of no. 40 wires and Kovar seals in the brass plate. External resistances permitted 110 volts A.C. to be used in feeding current to the resistor. When it dissipated 1 watt, the helium boiled slowly, and could be brought from a few millimeters vapor pressure up to atmospheric pressure in a few minutes time.

As the diagram shows, the torsion pendulum is in contact only with helium vapor. A group of three lucite washers serve as a baffle to reduce any turbulence of helium vapor. As a result of these precautions the pendulum is very steady and is not noticeably disturbed by the action of pumping off the helium vapor.

PART IV. EXPERIMENTAL PROCEDURE

Dynamical Behavior of a Ball with a Frozen Moment

The behavior of a superconducting ball with a frozen moment can be predicted on the basis of a simple model. This model is a diamagnetic ellipsoid which is in stable equilibrium in the field B when its preferred axis E is parallel to B. In this ellipsoid there is a permanent magnetic moment M which also tends to align itself parallel to B. For convenience the moment vector M is used to define the position of the ball relative to the vector B in the laboratory. When B = 0, the position of the ball is controlled by the torsion fibre and M aligns itself parallel with the axis denoted by $\theta = 0$.

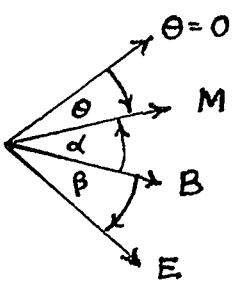

B is the field of magnetic induction fixed in the laboratory.
M is the magnetic moment fixed in the ball.
E is the ellipsoidal axis fixed in the ball.
$\theta = 0$ axis is fixed relative to the upper end of the torsion fibre.

α is positive as drawn. θ and β are negative.

The torque on the ball is given by the equation: $T(\theta) = -K\theta - EB^2 \sin 2\beta - MB \sin\alpha$ where K is the torsion constant of the fibre. When the ball is at rest in the field B, $\theta = \theta_e$, $\alpha = \alpha_e$, $\beta = \beta_e$, and $T(\theta) = 0$. From the theory of harmonic oscillators it follows that for small oscillations, this equation is satisfied: $\omega^2 I = -\frac{d}{d\theta} T(\theta)$ at $\theta = \theta_e$

In this equation ω and I are respectively the angular frequency and the moment of inertia of the system. In this case, the angle Θ differs from each α and β by a constant and so the indicated differentiation gives the following result:

$$\omega^2 I = K + 2EB^2 \cos 2\beta_e + MB \cos \alpha_e$$

For the limiting case of zero field this reduces to the familiar equation $\omega_0^2 I = K$. Eliminating I from these last two equations gives the convenient relationship:

$$\left(\frac{\omega^2 - \omega_0^2}{\omega_0^2}\right) K = 2EB^2 \cos 2\beta_e + MB \cos \alpha_e$$

A set of equations of this kind with α_e and β_e varying with the different field values B would be exceedingly difficult to solve. In the limiting case of small values for α_e and β_e a solution could be reasonably well worked out. However, it occurs that β_e will not generally be a small angle even though α_e usually is. An easy way out of the difficulty exists if α_e and β_e are kept constant throughout any set of measurements. This is done very simply by twisting the brass rod which forms the point of suspension for the torsion fibre. In this way, the angle Θ_e is changed so that the condition of static equilibrium is satisfied for the same values of α_e and β_e, even though the field B changes. With this precaution taken when the frequencies are measured, it is easy to solve for $M \cos \alpha_e$ and $2E \cos 2\beta_e$ as unknowns. In all of the measurements made, α_e is less than 4° so that $\cos \alpha_e$ is sensibly unity. Hence it is not necessary to make further measurements every time if all one wants to know is the abso-

lute value of the moment M. However, it is necessary in at least part of the measurements to make complete measurements to get each of the four unknowns E, M, α_e, and β_e, because only if this is done can the validity of the model be proved. Two ways exist to make a practical determination of the other unknowns. The first is to make further use of the dynamical equation for $\omega(B)$. The second is to make use of the static equation for $T(\theta)$. These two methods will be described in that order.

(1) For a given fixed pair of values for α_e and β_e it is only necessary to make a measurement of the angular frequency (or period of oscillation) for two different values of B and then the two unknowns $E \cos 2\beta_e$ and $M \cos \alpha_e$ can be evaluated. The way in which one determines that α_e and β_e are constant is to observe the light beam reflected from any one of the eight mirrors attached to the torsion system. The eight mirrors are spaced at known angular intervals of about 45°, and this makes it particularly easy to rotate the ball to a new angular position and repeat the measurements after α_e and β_e have been changed by a known fixed amount. In this way it is possible to calculate $E \cos 2(\beta_e + 45^\circ)$, $M \cos (\alpha_e + 45^\circ)$ and so forth. Thus all four of the unknowns are separated.

(2) Independent cross checks on the calculations can be made using the equation of static equilibrium:

$$T(\theta) = 0 = K\theta_e + EB^2 \sin 2\beta_e + MB \sin \alpha_e$$

In the measurements already described α_e and β_e were kept constant with varying B, only by changing θ_e. These changes in θ_e are measured by observing a light beam which is reflected from a mirror attached to the upper brass rod. The torques $K\theta_e$ can then be written as a sum of a part linear in B and one quadratic in B. The quantities $E \sin 2\beta_e$ and $M \sin \alpha_e$ are then found independently.

The experimental equipment is built in such a manner that exceedingly accurate measurements of ω are possible. Hence, the first of the two methods is the one used to get the most precise data. The optical system used to measure the changes in θ_e does not permit these changes to be measured with such a small percentage inaccuracy as is possible in the measurements of ω^2. For this reason, these static measurements are used only as a cross check, or as a method of independently evaluating α_e and β_e when too little data was taken by the other method to get a separation of the two unknowns in each of the products $M \cos \alpha_e$ and $2E \cos 2\beta_e$.

Preparations to Take Data

The torsion pendulum system including the inner dewar flask which holds the liquid helium is a portable assembly. On the day preceding an experiment, the pendulum system and its mechanical supports are adjusted so that the oscillations take place freely without danger of hitting any obstructions. The tin sphere is exactly centered in the field of the Helmholtz coils. The coils in turn are adjusted to produce a

field that is parallel to the field of the earth. With these adjustments made, it is then possible to remove the entire assembly with a sure knowledge that it can be replaced a day later and still have its proper geometric alignment.

On the morning of the experiment, the inner dewar flask is pre-cooled to the liquid nitrogen temperature while the helium liquifier is preparing the liquid helium refrigerant. This pre-cooling is done by moving the experimental inner dewar flask from its experimental station between the field coils to another position where it is placed inside a pre-cooling outer dewar. Liquid nitrogen is placed in the outer dewar. A small amount of dry air is introduced into the vacuum wall of the inner dewar. After two or three hours the inner dewar is near the temperature of liquid nitrogen. The dry air is pumped out of the vacuum wall, and the inner dewar is then ready to receive the liquid helium refrigerant.

The experimental dewar is then taken to the helium liquifier. The liquid helium is forced out of the helium liquifier under its own vapor pressure. With an over pressure of only 0.5 pounds per square inch the liquid helium is forced out of the liquifier, through a double walled vacuum transfer tube, into the experimental dewar flask. The dewar flask is then taken to the experimental station and placed inside the outer dewar which is then filled with liquid nitrogen. With the hose connections from the dewar flask to the manometer and vacuum pump connected, experimentation can then proceed.

Taking the Data

The tin ball on the end of the pendulum actually behaves like an ellipsoid because of the variation of 4 parts in 10,000 on the diameter. The experimental evidence with the ball normally conducting at 4.2° K. is very easy to interpret. If a magnetic field is suddenly applied or removed, transient eddy currents are formed in the ball. Because the normal conductivity is very great, the eddy currents produce a sizeable transient magnetic moment. Corresponding to this magnetic moment there is usually an impulsive torque on the ball. If the ball is rotated through 360°, two positions of stable equilibrium are found, and two positions of unstable equilibrium are found. At the latter positions a slight angular displacement of the ball results in a torque which tends to move the ball farther away from the position of unstable equilibrium. Before a moment is frozen in the ball, it is placed in its position of stable equilibrium. In this way the effect of the ellipsoidal shape of the ball will be minimized in the experimentation to follow.

With the ball in its proper angular position, the torsion system is lowered one or two millimeters by pushing down the upper brass rod. The ball is then at rest because the ball and glass rod is resting on a stop. A suitable current is put in the field coils and the vacuum pumps are started. This is the process of freezing in a moment indicated by the line a b c d e f in figure 5. When the vapor pressure and corresponding temperature are low enough (point f, figure 5), the

field is then reduced and the torsion system lifted free to oscillate.

There are two mirror systems used to take the data. The lower mirrors are numbered 1 through 8 and are attached to the ball. The single upper mirror is attached to the upper rod and is used to locate the angular position of the upper support of the torsion fibre. The following data is tabulated.

(1) The angular displacements of the oscillating system are measured. This is done by observing the image of a hair line that is reflected from one of the mirrors, numbered 1 through 8. This also locates the center of oscillation.

(2) The time is measured for either 10 or 20 oscillations. On a few occasions 50 swings were measured in order to get better damping measurements as in step (1).

(3) The position of the light beam reflected from the upper mirror is marked on a scale.

These steps (1) through (3) are then repeated for several different values of the current in the Helmholtz coils. This current is precisely measured and tabulated. Before each period measurements is made the upper support is twisted in order to make the center of oscillation the same as it was on the preceding measurement. These processes give one data in a form which is easily used to make the calculations that are described at the beginning of part IV.

When one magnetic moment has been measured in this way a second moment can be frozen in. The oscillating ball is set on its rest position a second time. It may be desired to

freeze in a moment at a constant value of the temperature. In this case the field is carried through the path F e D C B A and then reversed A B C D e F. The field is reduced again and measurements of the period and damping proceed as before.

When it is desired to freeze in a moment again by the constant field method this procedure is followed. The pumping line is pinched off. The radio resistor heater is used to bring the vapor pressure back to the atmospheric pressure. The desired current is put in the field coils. The pumping line is opened and the vapor pressure is again reduced. Measurements proceed as before.

PART V. THE EXPERIMENTAL RESULTS

Validity of the Model

It is particularly important to establish the validity of the model that was proposed in the beginning of Part IV. According to this model, three functional relationships exist that can readily be tested. These three relationships are proven to be true by the data in table 1, part of which is graphed in figure 9.

(1) For a fixed position of the ball, $w^2(B)$ is a second degree equation. The term linear in B is proportional to the fixed moment M, and the term quadratic in B is proportional to the "ellipsoid coefficient" E. In table 1, it is demonstrated that M and E are calculated to be the same number regardless of what group of data points are used in the calculation. The values of E show a little scatter which is to be expected from the uncertainty of the frequency measurements, w.

(2) For a given frozen moment, the measured component of M is a cosine function of the angle α. The experimental fit as seen by the tabulated data is very close. The errors are too small to show on the graph.

(3) For a given frozen moment, the measured component of the "ellipsoid coefficient" E varies with the angle β as the function $\cos 2\beta$. The errors here are large enough to show on the graph, but the uncertainty of the measurements of w is enough to account for the errors. A given absolute error in the value of w^2 leads to a fixed abso-

lute error in E. Hence, for small values of E, w must be measured with unusual accuracy to avoid the percentage uncertainty in the values of E that is shown.

The Magnetic Moment as a Function of the Field Used to Form It

In this section the discussion is confined to data on those magnetic moments that were formed by the constant field method. The first experimental runs that were made did not give quantitatively precise data because of experimental difficulties. These trials were useful in showing that the moments formed in fields of 11 gauss and 22 gauss were about the same. The indication was that a saturation effect occurred. With the experimental difficulties removed a run was then made to test this hypothesis. These results are shown on the graph figure 6. This graph shows the component of M that is parallel to B plotted as a function of the field in the Helmholz coils. The negative values of the field oppose the horizontal component of the earth's field. The vertical component of the earth's field is always present.

The results show that for a small range of field a saturation effect does occur. The frozen moment makes what is virtually a discontinuous jump, and then levels off. This striking peculiarity has never been reported in the literature as far as we know.

This peculiar effect was also shown by data taken during a later run and displayed graphically in figure 8. The graph corresponding to the constant field method shows that the mag-

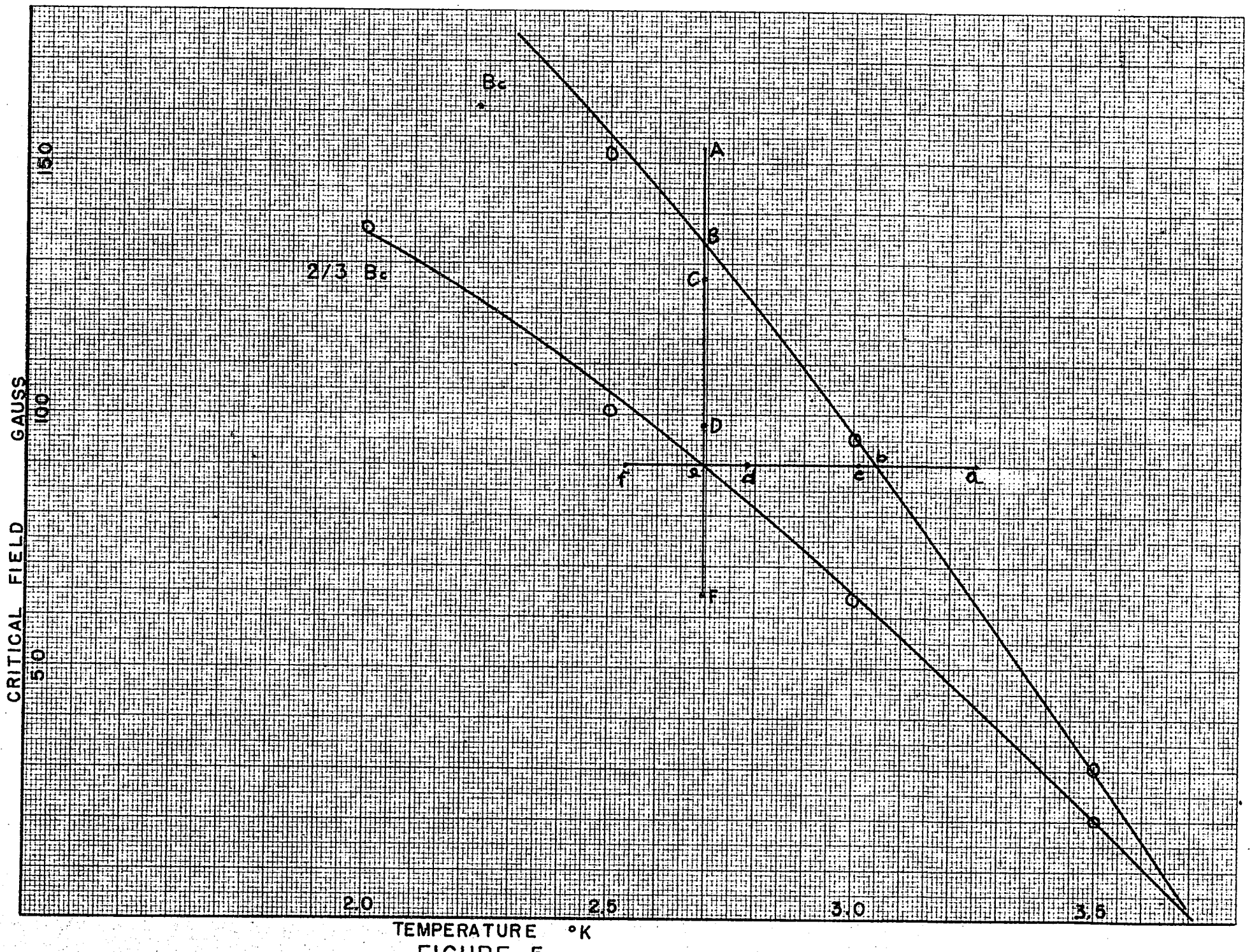

FIGURE 5

TABLE 1

Sample Data Table Showing Calculation Method and Validity of Model

Column A — Sequence number indicating the time sequence in which the operations were performed.

B — Potentiometer reading in ten thousandths of a volt. This number, when multiplied by .0041 gives the Helmholz coil field in gauss. The earth's field which must be added to this field is + 0.2 gauss or + 49 potentiometer units.

C & D — The period of oscillation τ in seconds and τ^{-2} in units of 10^{-6} sec.$^{-2}$

E — The experimentally observed value of M cosα in dyne cm. gauss^{-1}.

F — The data points corresponding to the observed values in columns E & H.

G — The value of M cosα assuming M = .1410 and $\alpha_2 = -3.6^\circ$. The subscript 2 refers to the original position using mirror 2.

H — The observed value of E cos 2β in dyne cm. gauss^{-2}.

I — The value of E cos 2β assuming E = .00102 and $\beta_2 = 18.80$.

J — The center of oscillation in centimeters on the scale at 4 m.

K — The position of the light beam reflected from the upper mirror in centimeters on a scale at 4 m.

The value of the angle α_2 as calculated from the static equilibrium data in K is -3.7° compared with -3.6° determined by the period data.
The value of the angle β_2 as calculated from the static equilibrium data in K is 12.2° compared with 18.8° determined by the period data.

THE UPPER GRAPH IN FIGURE 9 COMPARES COLUMNS G AND E

THE LOWER GRAPH IN FIGURE 9 COMPARES COLUMNS I AND H

TABLE 1

(Constant Temperature 3.25°K)

A S.N.	B Pot	C τ	D τ^{-2}	E M obs.	F	G M calc.	H E obs.	I E calc.	J center	K mirror
		Mirror 2	Ball in the position it had when the moment was frozen in.							
6a	0	20.49	2382	.1407	abc	.1407	.00081	.00081	26.1	0
6b	2732	18.32	2979						24.3	-6.9
6c	-2746	22.83	1919							16.6
		Mirror 1	Same moment as above. Ball rotated through 44.4°.							
7a	-2746	22.79	1925	.1063	abd	.1067	-.00061	-.00060	28.8	
7b	2740	19.17	2721						28.9	
7c	1370	19.76	2561	.1063	acd		-.00061		25.9	
7d	0	20.52	2375						28.4	
		Mirror 8				Ball 90.2° from original position.				
8a	0	20.56	2366	.0131	abc	.0093	-.00061	-.00063	26.4	
8b	1372	20.52	2377						26.5	
8c	-1375	20.72	2329						25.7	
8d	-2780	21.09	2248	.0143	abd		-.00078		26.5	
		Mirror 6				Ball 178.8° from original position.				
9a	-2778	18.34	2973	-.1397	abc	-.1404	.00098	-.00084	27.0	
9b	2781	22.86	1914						27.9	
9c	0	20.59	2359						25.3	
9d	-1371	19.47	2638	-.1390	bcd		.00092		28.0	

TABLE 1 (continued)

Sample calculation to get the results

$$\left.\begin{aligned} M \cos \alpha &= .1407 \\ E \cos 2\beta &= 8.1 \times 10^{-4} \end{aligned}\right\} \quad \text{sequence no. 6}$$

The equation is

$$\frac{\gamma^{-2} - \gamma_0^{-2}}{\gamma_0^{-2}} K = (M \cos \alpha) B + (2E \cos 2\beta) B^2$$

Insert the numerical values from the table, expressing B in gauss, and K = 7 dyne-cm. radian^{-1}. γ^{-2} may be left in the units shown. We then get these three equations corresponding respectively to 6a, b, and c:

(a) $$\frac{2382 - \gamma_0^{-2}}{\gamma_0^{-2}} 7 = (M\cos\alpha)(49 \times .0041) + (2E\cos 2\beta)(49 \times .0041)^2$$

(b) $$\frac{2979 - \gamma_0^{-2}}{\gamma_0^{-2}} 7 = [(2732+49).0041] M\cos\alpha + [(2732+49).0041]^2 2E\cos 2\beta$$

(c) $$\frac{1919 - \gamma_0^{-2}}{\gamma_0^{-2}} 7 = [(-2746+49).0041] M\cos\alpha + [(-2746+49).0041]^2 2E\cos 2\beta$$

We have 3 equations and 3 unknowns and the solution follows immediately. In practice it is best to make an approximate solution for γ_0^{-2} as it must be very close to the figure 2382 above. Then the equations (b) & (c) are solved. This is much faster, and a number of checks showed that it is perfectly safe.

TABLE 2

Time Sequence Number	Helmholtz Coil Field gauss	$M \cos \alpha$ $\frac{\text{dyne-cm.}}{\text{gauss}}$	α degrees	$E \cos 2\beta$ $\frac{\text{dyne-cm.}}{\text{gauss}^2} \times 10^4$
4	0.22	$.059 \pm .002$		-2.7 ± 1.0
1	0	$.059 \pm .002$		
2	-0.13	$.006 \pm .002$		
3	-0.18	$0 \pm .002$	See note*	
5	-0.23	$-0.010 \pm .002$		

* $M \sin \alpha$ is apparently less than 0.003 dyne cm. gauss^{-1}.

TABLE 3

(Feb. 21)

Constant Field Method

Time Sequence	Forming Field Gauss	M cos α dyne-cm./gauss	α degrees	E cos 2β dyne-cm./gauss^{+2} x 10^4	β degrees
1	11.3	.0791 ± .0015	0.8 ± 0.2	8.4 ± 3	12 ± 4
		.0788 ± .0008	0.9 ± 0.2	9.2 ± 0.7	9 ± 3

Constant Temperature Method

Time Sequence	T °K	2/3 B_c gauss	M cos α	α	E cos 2β	β
6	3.25	44	.1407 ± .0008	-3.6 ± 0.5*	8.1 ± 0.7	18 ± 5*
				-3.8 ± 1		12 ± 6
5	3.23	46	.1526 ± .0015	-4.0 ± 1.0	15 ± 3	6 ± 3
			.1515 ± .0008		12 ± 7	
4	3.08	59	.236 ± .002	-3.3 ± 0.6	13 ± 3	9 ± 3
			.227 ± .001		11.5 ± 0.5	
3	2.38	110	.645 ± .002	-2.4 ± 0.4	8 ± 3	--

The indicated errors in M cos α and E cos 2 β are based on the uncertainty of the period measurements alone.

*Based on period measurements (See figure 9). All other values of α & β are calculated from static torque data.

TABLE 4

(Mar. 15)

Constant Field Method

Time Sequence	Forming Field Gauss	M cos α dyne-cm. / gauss	α degrees	E cos 2 β dyne-cm. / gauss^{+2} x10^4	β degrees
11	0.2	.057			
1	16	.057	0.9	2.6 ± 0.7	
5	25	.075	-1.9	2.9 ± 0.7	-24 ± 12
8	39	.099	0.3	1.2 ± 0.7	
3	57	.143		-0.8 ± 0.7	
7	90	.273		1.5 ± 0.7	

Constant Temperature Method

Time Sequence	T K	2/3B_c gauss	M cos		E cos 2
2	3.44	25	.058		2 ± 0.7
12	3.30	39	.099*	0.7	0.2 ± 0.7
13	3.29	40	.101		
6	3.28	41	.101	-	1.2 ± 0.7
9	3.09	58	.178	-2.7**	
4	2.71	91	.466	1.6	1.1 ± 0.7

*Before reducing the field, the field was raised only until H_o was equal to about 87 or 88% of H_c.

**Based on period measurements. All other values of α and β are calculated from static torque data.

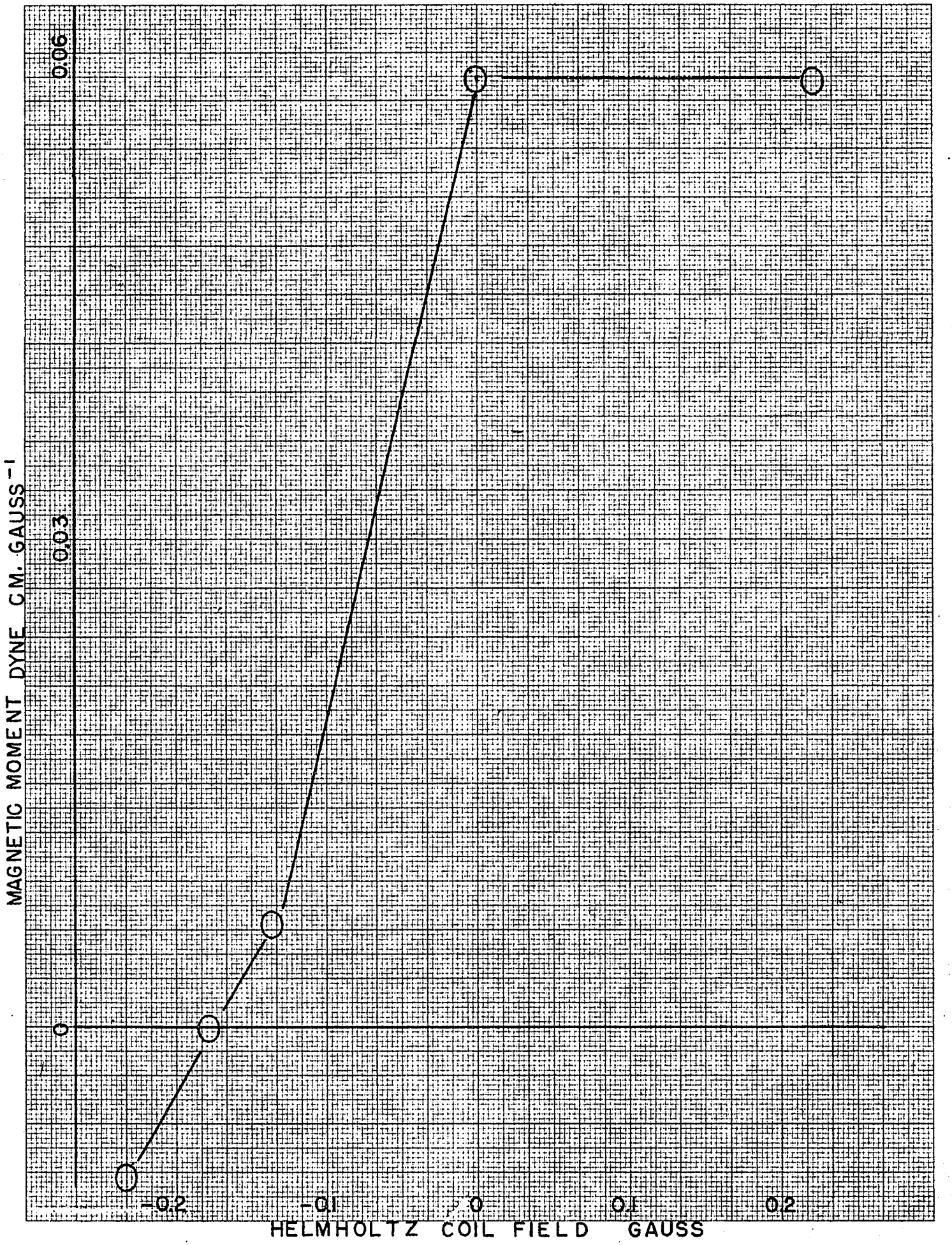

FIGURE 6

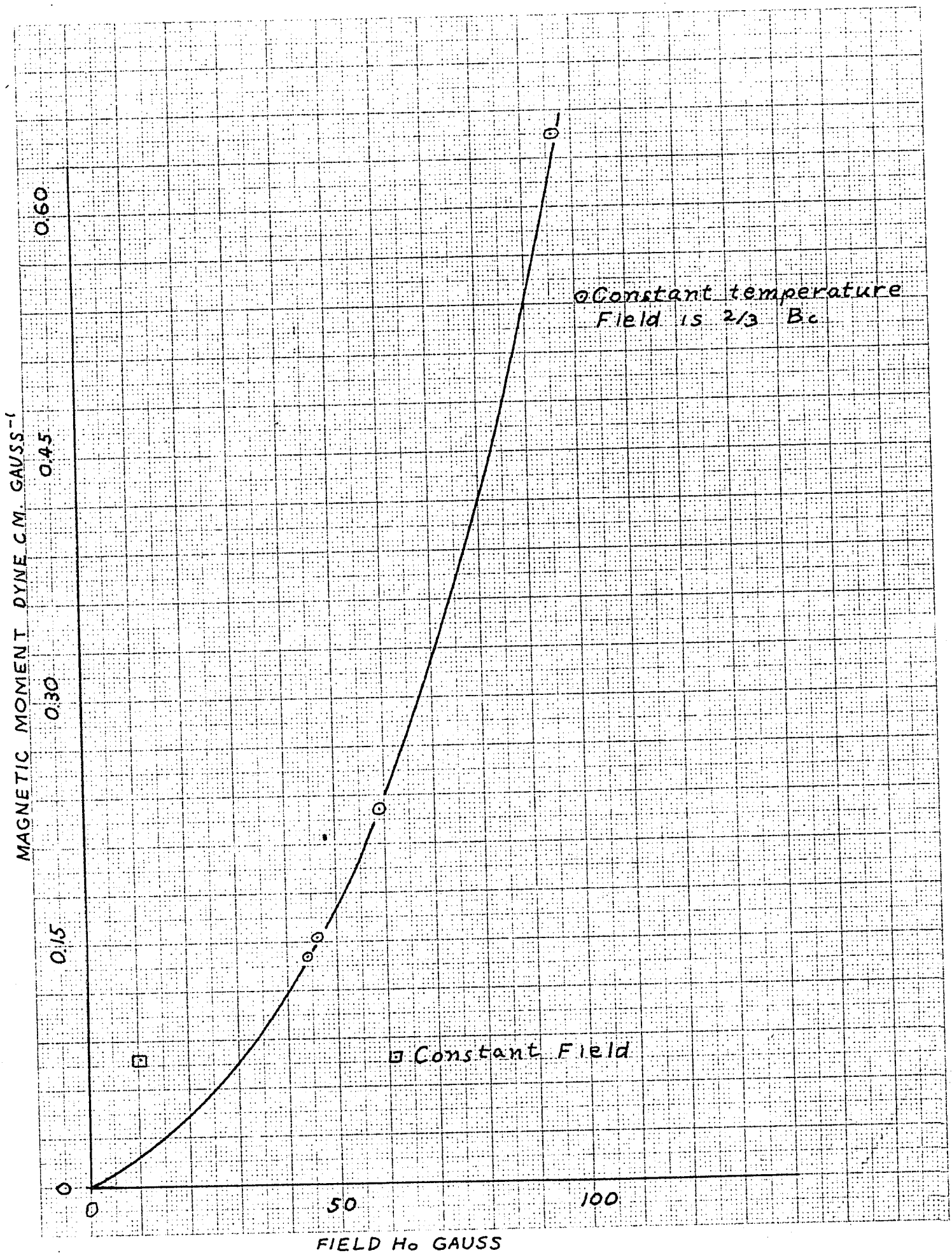
MAGNETIC MOMENT DYNE C.M. GAUSS^{-1}
0.60
0.45
0.30
0.15
0
0
50
100
FIELD Ho GAUSS
⊙ Constant temperature
Field is 2/3 Bc
⊡ Constant Field

FIGURE 7

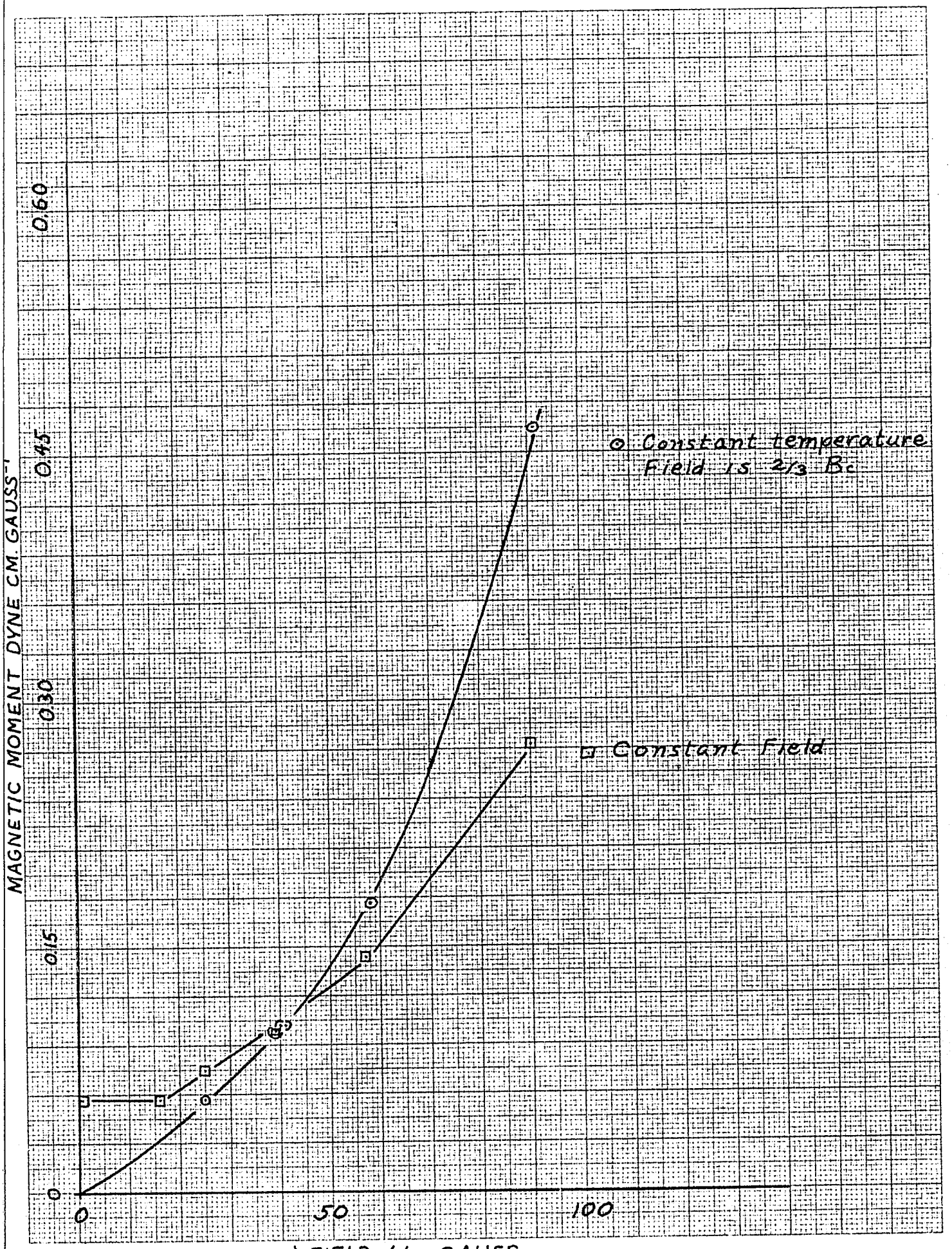
MAGNETIC MOMENT DYNE CM. GAUSS⁻¹
0.60
0.45
0.30
0.15
0
0
50
100
FIELD Ho GAUSS
Constant temperature
Field is 2/3 Bc
Constant Field

FIGURE 8

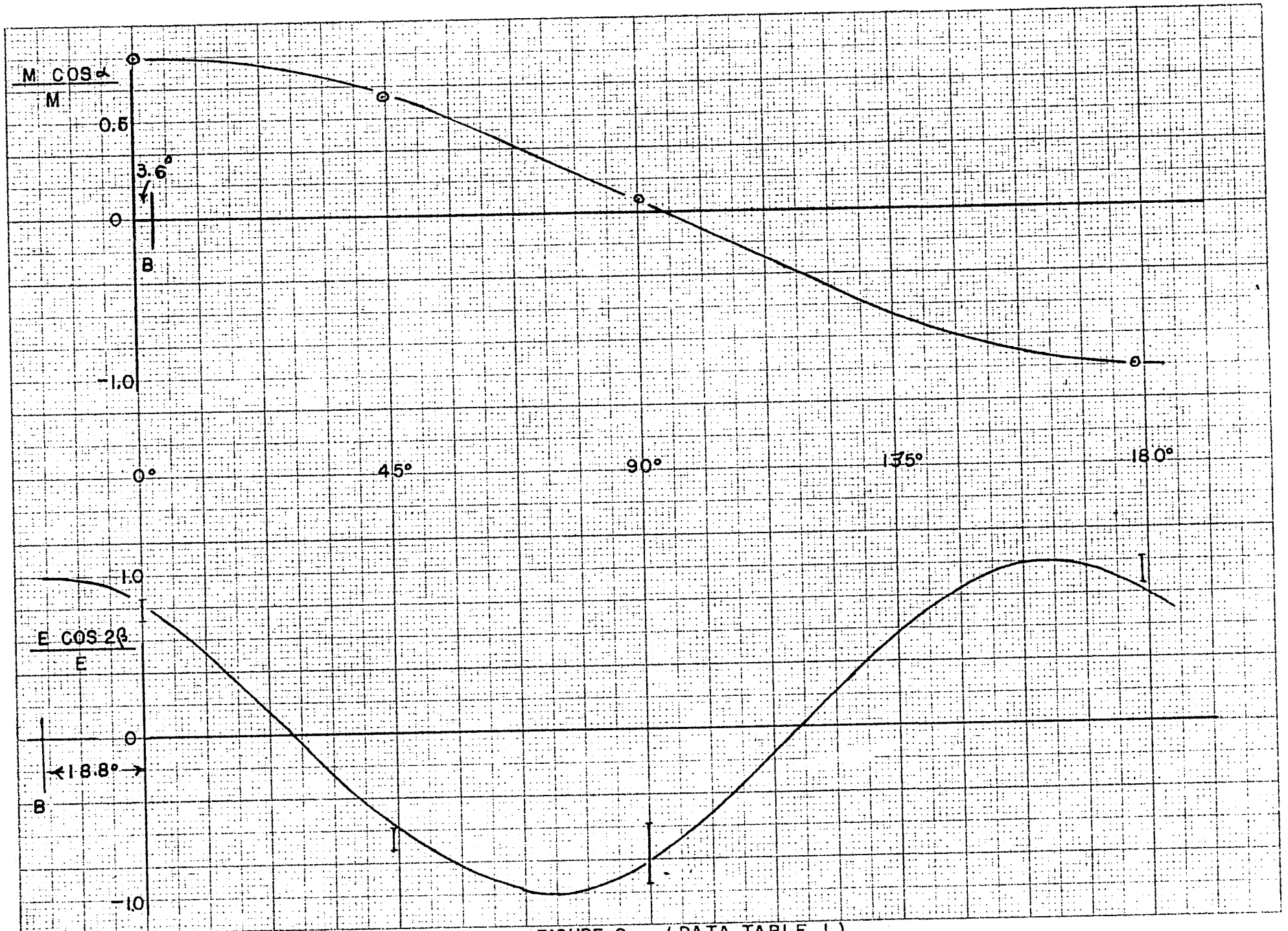

FIGURE 9 (DATA TABLE I)

netic moment remains constant for all values of the forming field between 0.2 gauss and 16 gauss. It may remain constant for greater fields that approach 25 gauss, but this upper limit cannot be determined from the small number of data points. For still greater fields the moment is seen to increase again, and the manner in which it increases is irregular. It is not possible to draw a smooth curve to fit these data points. For this reason, the data points on the graph are connected by straight lines. Interpolation on this graph is clearly unsafe. It may be noticed that the constant moment that exists for the fields below 15 or 20 gauss is not exactly the same for experiments performed on different days. This apparently happens because the tin ball did not sit in its holder in exactly the same geometrical position on the different days. This is known because milling marks on the ball allow one to check for changes in the position of the ball.

The Magnetic Moment as a Function of the Temperature at Which it was Formed

The question arises whether or not it is possible to correlate the results described for the constant field case with the results that would be obtained if the moment were frozen in at constant temperature. Two hypotheses come to mind immediately. One is that the magnetic moment is determined by the value of the critical field B_c when the intermediate state is entered. The second is that the moment is determined by the value of $2/3\ B_c$ when the ball passes from the intermediate state into the superconducting state. According to the second

hypothesis, the same moment would result for the temperature change a b c d e f and the field change A B C D e F in figure 5. The test results shown in figure 8 prove that neither hypothesis is valid.

In figures 7 and 8, the constant temperature data has been plotted with 2/3 B_c instead of the temperature taken as the abscissa. In both cases the experimental points can be fitted to a smooth curve. One interesting question is whether or not the "virtual discontinuity" in the moment function exists in this case. The smooth curves connecting the data points have been drawn as if it did not exist. None of the data points correspond to values of 2/3 B_c that are small enough to decide the question.

The results of Shoenberg's experiments which are graphed in figure 1 show that with decreasing values of the external field, hysteresis effects begin to appear at $H_o = 0.71\ H_c$. The suggestion taken from this is that in our experiments it is not necessary to take the ball entirely out of the intermediate into the normal state before reducing the field to freeze in a moment. Only one test was made. In table 4, the moment corresponding to time sequence no. 12 was made by reducing the field after it had been raised to only about 88% of H_c. Comparison with the data in the same table for sequence numbers 13 and 6 shows that the moment is the same in the three cases within 2 percentum.

TABLE 5

(Mar. 15)

Damping Calculations

Run	Moment $\frac{\text{dyne-cm.}}{\text{gauss}}$	Field gauss	Logarithmic decrement $\text{sec.}^{-1} \times 10^4$
4a	0.466	0.2	3.39
4b		11.6	3.24
4c		-11.2	4.32
4d		22.9	3.50
7a	0.273	0.2	3.34
7b		11.4	3.24
7c		-11.0	3.59
		(Feb. 21)	
4a	0.235	0.2	3.79
4b		5.8	4.11
4c		24.0	4.32
4d		-5.4	4.39

Damping Measurements

At temperatures below 4.2° K. the tin ball in the normal state will be greatly damped by fields as small as 0.1 gauss. This eddy current damping has been shown to vanish in the superconducting state.[14] The question arises whether or not the normally conducting threads that exist in a body with a frozen moment will have any effect on the damping rate. The most useful data that bears on this question is tabulated in table 5.

This table compares the logarithmic decrement of the ball with frozen moments, when oscillating in the earth's field and when oscillating in larger fields of 5 to 20 gauss. In two cases the measured effect of increasing the field is to reduce the logarithmic decrement 3% and 5% below what it was for the oscillation in the earth's field. These results plainly are not correct. A steady field is not feeding energy to the oscillator as it would have to do to explain these two results.

In six cases, increasing the field causes the logarithmic decrement to increase by amounts that vary from 3% to 30% over the value of the decrement of the ball with the same moment when oscillating in the earth's field. The damping effect of the frozen moments is clearly quite small.

Discussion of the Results on Frozen Moments

Since a smooth curve does fit the data taken by the constant temperature method, another question comes to mind. Is

it possible to write a simple emperical equation to describe the function $M(2/3B_c)$? Three simple forms for a function were tried. A curve of the form $M = aB_c^2$ fails to satisfy for the smaller values of M. A second form is made by adding a linear term: $M = aB_c^2 + bB_c$. This is not wholly satisfactory either. Some points will still miss the best curve by 4 or 5 gauss. A third form is made by omitting the linear term and adding a constant term: $M = aB_c^2 + c$. Using this algebraic form, it is possible to write equations that fit each of the experimental curves with no points off by more than about 2 gauss. The critical field curve itself is in doubt by this much. However, this apparent fit may be partly fortuitous. There are only four sensibly different points on each of the constant temperature graphs in figures 7 and 8. In each case two of the data points can be forced to fit a function of the form postulated, and so a good fit on two other data points is scanty evidence on which to base a definite conclusion as to the best functional form to assume. It does seem sure that a quadratic term in B_c is needed.

The question of fitting a simple emperical formula to the data is an important one. Simple models can be invented that would account for the results. For example, the term in the M function that is quadratic in B_c can be explained by assuming that a number of normal conducting "holes" are formed that is proportional to B_c; or it could be said that the cross section area of a fixed number of "holes" expands linearly with B_c. The results of de Haas' experiment with a ball with a

canal cut in it suggests that in either case the total frozen flux would vary as B_c^2.

In any case this question will have to wait for more complete data. This additional data should be for small values of B_c. Although the present data does not settle this question, the smooth curves that are obtained suggest that a simple explanation of the magnitude of the moments may exist.

The numerical values of the frozen moments that are given here can be interpreted in another interesting way. We may calculate the value of the frozen field of induction that corresponds to the moments tabulated. Most intermediate magnetism textbooks work out the problem of the magnetization inside a sphere placed in a uniform field. The result for this magnetization is $I = 3\frac{(\mu-1)}{(\mu+2)}\frac{H}{4\pi}$ in gaussian units or $I = \frac{3(\mu-1)}{\mu+2} B/\mu_0$ in MKS units. For $\mu = o$, it follows immediately that the total magnetic moment M = Volume x I = $-\frac{1}{2}r^3H$ gaussian units. For the ball used, the radius r = 1.27 cm., and in the case of 100% frozen moment, M = 1.024 H_o gauss cm.^{3} For all of the moments that were made in fields of 15 gauss or more the amount of the field that is frozen in is less than $\frac{1}{2}$ of 1% of the forming field.

Discussion of the Angular Position of the Moment Vector

The experiments show that the magnetic moments frozen into the ball were not quite parallel to the external forming field. Data tables 3 and 4 show that the angle was always less than 5° for those moments that are frozen in with forming fields

of 0.2 gauss or more. The value of this angle apparently is not dependent on the magnitude of the frozen moment. It does appear that a functional relationship might exist between the value of the angle and the process used to freeze the moment. If this is so, it emphasizes in another way that these two ways of freezing in a moment are distinctly different in nature.

The angle α that is given in the data tables is the angle between the moment vector and the measuring field. When the ball is lifted off its rest position after the moment is frozen in, it undergoes a slight angular displacement. Hence, the angle between the moment vector and the forming field will differ slightly from the angle α . This error is always less than 1°, and is probably less than $\frac{1}{2}^{\circ}$ or $1/3^{\circ}$ in most cases. This is judged to be the case because of observations made of the light beam reflected from one of the mirrors when the ball is lowered to its rest position. This error could be reduced if it were considered important to do so.

Discussion of the Ellipticity Effect

Those torques operating on the oscillating system which vary quadratically with the measuring field are considered to be caused by the ellipsoidal character of the ball. For the measuring fields used in this work, these torques are a hundred to many thousands of times smaller than the torques operating on the frozen moments. The existence of this ellipticity effect was originally expected because the ball has variations in its diameter of about 4 parts in 10,000. There are reasons

to doubt that this explanation is satisfactory for the ellipticity effects observed in this experiment. These reasons are discussed in the paragraphs that follow.

The theoretical problem of the torques operating on a diamagnetic ellipsoid is discussed in a paper by Laufer.[15] He shows that in general the torques observed are the sum of torques which are caused by a uniform field and torques which are caused by a non-uniform field. The first of these torques has been calculated for the amount of ellipticity indicated by the micrometer measurements on the ball. The calculated values are a thousand times smaller than most of the torques observed experimentally. For those torques caused by the non-uniformity of the field, the theoretical problem is more difficult. The integral expressing this torque cannot be evaluated in terms of tabulated functions, and the problem has not been worked out.

If the ellipticity effect is caused by the machining of the ball alone, the coefficient E should not change as long as the ball does not move in its holder. The evidence on this point, as shown in tables 3 and 4, is not wholly conclusive. The changes in the value of E are at the greatest only 2 or 3 times greater than the predicted uncertainty in the measurements of E.

The angular position of the ellipsoid axis appears to vary, and in some cases it is 20° or more from the position of the forming field B. The transient magnetization that exists when the field B is changed in the normal conducting ball was

used to find the ellipsoidal axis in the normal state. This axis was then placed parallel to the field B at the start of the experiments. These data on the angular position of the ellipsoidal axis E appear to be completely in conflict with the idea that the observed ellipsoidal effect is simply the result of imperfect machining.

In considering other causes for the ellipticity effect, two possibilities come to mind. One explanation is that the normal conducting "holes" that are formed in the ball change the shape of the remaining part which is effectively diamagnetic. The second is that the effect may be spurious and caused by solid air or some other contaminant in the dewar flask. In the experimental data published here, there was no visible evidence of any solid air within about 35 cm. of the ball -- and very little anywhere. Another experiment, which did not yield useable data because of solid air, also showed an unusually large ellipticity effect. This effect becomes greater as the quantity of solid air in the flask increases.

The ellipticity effect in any case is a secondary effect, and not the one with which we are mainly concerned. If it is known that this effect does not interfere with the measurements on frozen moments, it can be ignored if desired. Considering its very small magnitude, clearly the ellipticity effect does not disturb the frozen moment measurements.

ERRORS

For the larger moments that are shown in figures 7 and

8, there is sensibly no error problem at all. For the small magnetic moments shown in figure 6 and for all of the ellipsoidal effect and damping measurements the error is important.

In figure 6 it is noticed that the measured component of the moment vanished when the Helmholz coil field was -0.18 gauss. The horizontal component of the earth's field should be neutralized at -0.20 gauss. It is not possible to analyze this discrepancy properly, because the vertical component of the earth's field was not neutralized. This neutralization should be accomplished if precise measurements are to be made for these very small moments.

Accurate measurements of the ellipsoidal effect are best made when the ball oscillates in fields of 20 gauss or more. This is so because these torques vary quadratically with the field. The current regulation in the field coils for these large fields is not satisfactory for precise measurements. This same lack of current regulation makes the damping measurements worse.

In most cases, the angles α and β are found by using the upper mirror and the associated light source to get static equilibrium data. $M \sin \alpha$ and $E \sin 2\beta$ are calculated from static data. The quantities $M \cos \alpha$ and $E \cos 2\beta$ are known from the period measurements and from this α and β are found. The equipment and techniques used for the static equilibrium data do not permit one to measure these static torques with the small relative errors that are found in the dynamic torque measurements.

The condition that α and β must be kept constant was not precisely satisfied, the error being less than 10^{-2} radian. The angular rotation of the upper mirror that was made between period measurements was sometimes only three or four times greater than the change in α and β. This results in part of the uncertainty in the calculated values of α and β which is indicated in the data tables. Precise calculations would be possible if the angular positions of both mirrors were controlled and read to 10^{-4} radians or less. This could be done if the accuracy gained were worth the time required in the shop and during the experiment.

The effects of mechanical disturbances of the pendulum system are most serious for these angle measurements, as they are always made immediately after the upper suspension of the torsion fibre has been handled. These same mechanical disturbances, except where most severe, have no observable effect on the period measurements.

CONCLUSIONS

As applied to spectroscopically pure samples, the following conclusions may be drawn from the work reported here:

(1) The constant temperature process and the constant field process of freezing in a moment are fundamentally different. This conclusion follows first, from the experiments of Meshkovsky[9]; second, from our magnetic moment functions plotted in figure 8; and third, from the angle data tabulated in tables 3 and 4.

(2) When the moment is frozen in by the constant temperature method, the moment is not even roughly a linear function of the critical field B_c, as has been often supposed. The moment is more nearly a quadratic function of B_c. See figures 7 and 8.

(3) Frozen moments generally are not exactly parallel to the external forming field. The difference is always less than 5° for any moments formed in fields of 0.2 gauss or more. See tables 3 and 4.

(4) When the moments are frozen in by the constant field method, the moment increases very sharply with increasing forming fields in the region between 0 and 0.2 gauss as shown in figure 6. For values below 0.2 gauss, the percentage of the forming field that is frozen in is very much higher than it is for any of the moments frozen in with fields of 15 to 90 gauss. In figure 8, for example, at 0.2 gauss the percentage of the forming field that is frozen in is 75 times greater than it is at 15 gauss. This consideration and the angle data of topic 3 above are important in considering the experimental difficulty of eliminating frozen moments in experimental work.

(5) There is only a very small increase in the damping rate when the field in which the oscillations occur is increased. If the field is changed from 0.2 gauss to 20 gauss, the percentage increase in the logarithmic decrement, although not accurately determined, must be less

than 30%.

(6) For most of the frozen moments, the percentage of frozen field is 1/6 to 1/2 of 1% of B_c. No other case is known in which less than about 3% has been reported.[5] Other workers have not used specimens of so nearly perfect spherical shape. This may be the principal reason for the small percentage of frozen field.

(7) The ellipsoidal effect is not wholly explainable in terms of the lack of perfect machining of the ball.

THE GYROMAGNETIC EFFECT IN A SUPERCONDUCTOR

PART I. INTRODUCTION

For pure solid superconducting materials, Meissner and Ochsenfeld[4] have shown that the magnetic induction B inside the metal is zero. This implies either perfect diamagnetism or large surface currents in the presence of a magnetic field. In either case, the gyromagnetic effect for a superconductor should be observable.

The gyromagnetic effect has been most satisfactorily observed by the Einstein-DeHaas method. This method uses a torsion pendulum made of the magnetic material and such that a change of magnetization causes a torque and a change in angular momentum.

Kikoin and Gubar[16] carried out just such an experiment on a small superconducting lead sphere. They drove their torsion pendulum with the impulses produced by reversing a vertical magnetic field at the resonant frequency. They calculated the magnitude of these angular impulses from the resulting steady state amplitude of the system; and in turn they determined that the ratio of the magnetic moment to the mechanical moment of the superconductor was the same as it would be in ordinary diamagnetic materials with a magnetization arising from orbital electron motions alone.

As has been shown by Meissner,[17] the model of perfect diamagnetism used by Kikoin and Gubar gives the same gyromagnetic effect as the picture of surface currents given by

the London theory. According to the London picture,[1] the changing magnetic field acts on the positive charge which remains when the superconducting electrons are disregarded. The experiment then serves to measure the product of this positive charge density and the square of the penetration depth.

The report of Kikoin and Gubar did not make completely clear the direction of the effect. Since the electrons go in one direction, and the material sphere, which is observed, goes in the opposite direction rather than being dragged along by the electrons, it is important that this direction be unambiguous. We have therefore repeated their gyromagnetic experiment with a superconducting sphere to demonstrate again both the magnitude and the direction of the effect.

PART II. EXPERIMENTAL APPARATUS AND PROCEDURE

Figure 3 shows the details of the experimental equipment which has already been described.

The switching of the solenoid current was controlled by a phototube and two stage directly coupled D.C. Amplifier which actuated a mechanical relay. A separate contact on the relay was used to shunt out, on alternate half cycles, a part of the plate resistance of the phototube, in order to compensate for the difference between the pull current and release current of the relay. This arrangement minimized the errors in switching time which otherwise would have occurred. The time for complete field reversal was less than 3×10^{-3} seconds corresponding to less than one six-thousandths of the period

of the pendulum.

The earth's field was neutralized and the solenoid field made vertical by adjustments similar to those outlined by Kikoin and Gubar. Precision was obtained by using a torsion pendulum with a one inch magnetized iron sphere of known magnetic moment.

The amplitude and period of the oscillations were measured by observing a hairline focused on a scale 12.5 meters from the torsion pendulum.

When cooling the tin sphere through the transition temperature the earth's field was neutralized and the sphere was set into oscillation with a large amplitude. This oscillation tended to further minimize any possible frozen in moment.[18]

PART III. EXPERIMENTAL RESULTS

The results of the experiment confirm those of Kikoin and Gubar. The directions of the angular impulses are the same as one would observe if the effect were that of Faraday induction operating on a sphere composed of positive ions. Referring to Figure 3, when the sphere is rotating in the clockwise direction as viewed from above, the field shifts from the down direction to the up direction as the oscillator passes through center. Under these switching conditions, Figure 10 shows the approach to the steady state condition with driving fields of 100 gauss or 10^{-2} webers/sq.m (curve A) and 51 gauss or 0.51×10^{-2} webers/sq.m (curve B). Just below these curves the zero field case (curve C) is plotted.

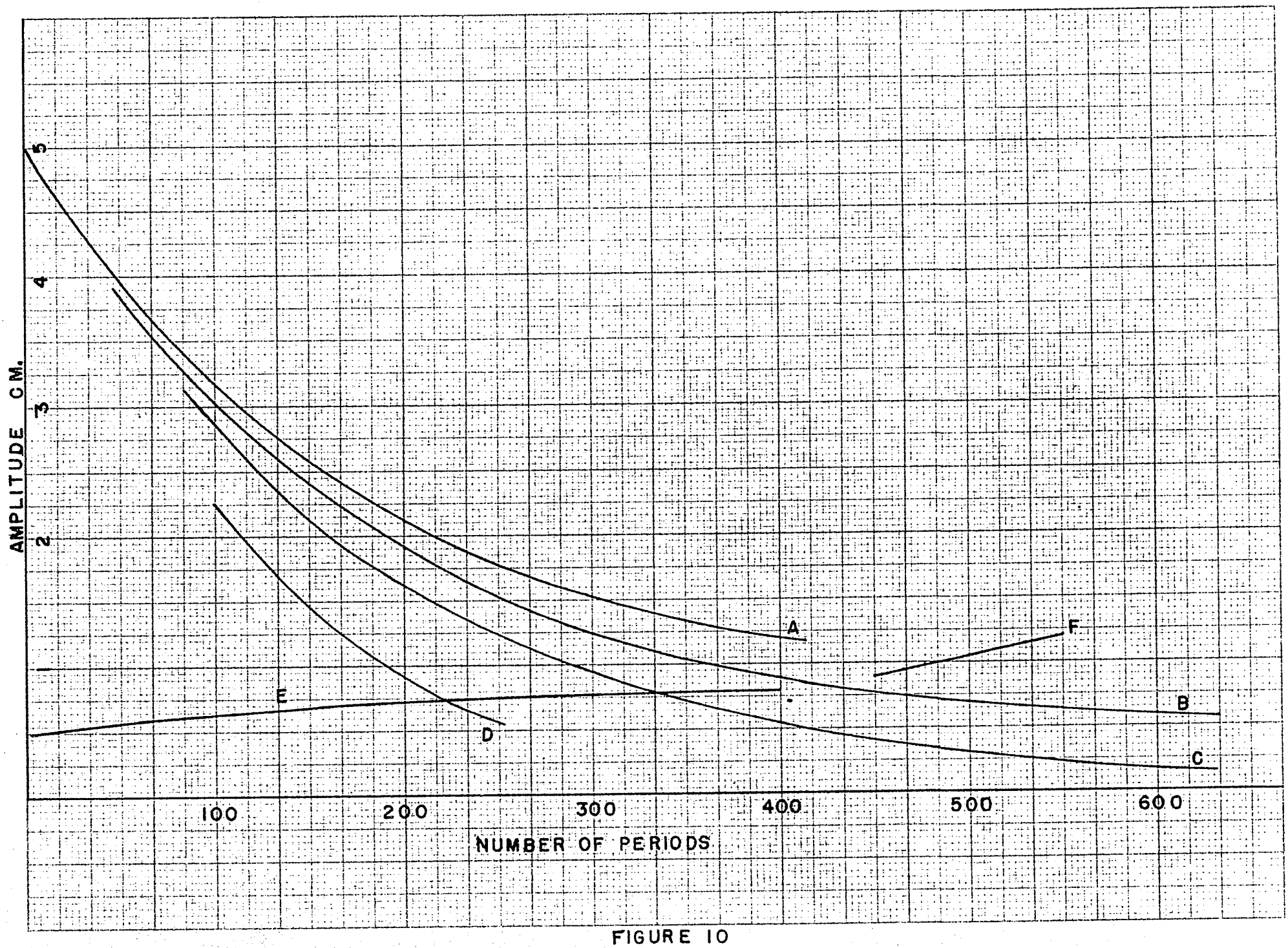

FIGURE 10

Curve D shows the effect of reversing the cycling of the switching in the case of the larger field. Also, for the larger field, the approach to the asymptote was made from the low amplitude side, as shown by curve E. Curve F relates to the error problem and is discussed later.

The experimental curves show an asymptotic approach to an amplitude of 0.48 cm. at $.51 \times 10^{-2}$ webers/sq.m and 0.83 cm. with 10^{-2} webers/sq.m.

The observed value may be compared with the results of a simple calculation based on consideration of the impulse and momentum change of the damped oscillator.

In the steady state the system behaves like a damped oscillator for $\frac{1}{2}$ cycle. It then receives an angular impulse which just makes up for the frictional loss of the absolute value of the momentum. This frictional loss of momentum is equated to the angular impulse given the oscillator because of the magnetic field change from B to the value -B. The equation of motion for $\frac{1}{2}$ period is

$$\theta = \theta_0 e^{-\delta t} \cos w t$$

with momentum: $I \dot{\theta} = -I \theta_0 (w e^{-\delta t} \sin w t + \delta e^{-\delta t} \cos w t)$

where the moment of inertia, $I = 69.4 \times 10^{-7}$ kg. m^2

and the measured value of $\delta = 2.67 \times 10^{-4}$ sec.$^{-1}$.

The loss in momentum in one half period occurs in the time interval $-\pi/2w$ to $+\pi/2w$ so that the momentum change is:

$$\Delta |P| = -I \theta_0 \delta \pi + \text{small terms}$$

Further detailed analysis shows that the steady state is approached exponentially and that the maximum amplitude of the

n'th oscillation θ_n is given by

$$\theta_n = \theta_o + A \; e^{-2\pi n \delta / w}$$

In the magnetic field B the sphere has a magnetic moment[1]

$$M = \frac{2\pi R^3 \; B}{\mu_o}$$

so that switching the field from B to -B causes a change of magnetic moment $\frac{4\pi R^3 \; B}{\mu_o}$. Then the change of angular momentum must be $\frac{2m}{e} \frac{4\pi R^3 \; B}{\mu_o}$ if $2m/e$ is taken to be the ratio between the angular momentum and the magnetic moment.

Equating the frictional loss of momentum to the gain from the field change we get a steady state angular amplitude.

$$\theta_o = \frac{2m}{e} \frac{4\pi R^3 \; B}{\mu_o} \frac{1}{I \delta \pi} = 3.87 \times 10^{-2} \; B \text{ radians, where}$$

B is expressed in webers/ sq.m.

This angular momentum is that of the superconducting electrons, but since the total angular momentum around the vertical axis does not change, the angular momentum of the positive ions and remaining electrons composing the sphere must change in just the opposite sense and by the same amount. It is this latter change that is observed.

Another way of looking at this phenomenon was suggested by Meissner.[17] The magnetic field penetrates only a short distance below the surface of the sphere, but as it changes, an electric field is present, which acts both on the superconducting electrons and on the remaining positive ions. Since the superconducting electrons do not drag the ions with them, the two systems move independently with equal and opposite

angular momenta. The motion of the positive ions is the one observed by the experimental arrangement used.

PART IV. DISCUSSION OF ERRORS

In preparation for the actual experimental process of driving the oscillator, error effects were noticed. The angular rest position of the ball assumed different values with different fields in the solenoid. When a steady upward vertical field of 10^{-2} webers/meter^2 was applied, the zero point shifted 0.3 m.m. corresponding to 1.2×10^{-5} radians of angle. With a steady downward vertical field of the same amount, the zero point shifted 0.9 m.m. to the right. These facts give clear evidence of the operation of a horizontal field component on a ball with both a small frozen moment and a small ellipsoidal effect. The existence of a horizontal component of field is to be expected for two reasons. First, a solenoid with the physical dimensions as small as ours might be expected to be a little non-uniform throughout the volume of the ball. Second, if the solenoid is tilted by an angle as small as 20 seconds it is quite likely that the resulting horizontal component would cause an observable effect.

Accurate measurements of these very small displacements are rather difficult to accomplish. Another way exists to measure the torques that operate on the frozen moment. It happens that when the solenoid is alternately switching up and down as the ball passes through its center, the measured period is a function of the amplitude. This is readily under-

stood in terms of the diagram shown here.

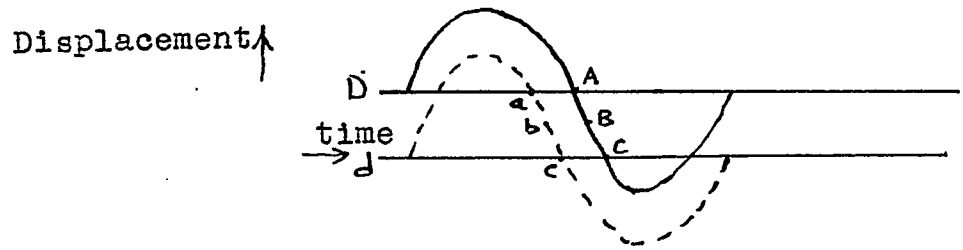

The solid line shows the displacement as a function of time relative to the zero position D. The dotted line shows the displacement function relative to another zero position d. The displacement D d in this case is 0.6 m.m. The ball starts to follow the dotted line, but on reaching the point b the switch is thrown and the ball is then at point B following the solid line. The time represented by b B is the time gained, and the measured period is correspondingly shortened. The smaller the amplitude is, the shorter the period becomes, because of the way in which the slopes change in the regions a b c and A B C.

The amount the period changes is not very much affected by the timing of the switching operation. This is plainly so, because the times represented by a A and by b B are so very nearly the same. A calculation based on this model exactly predicted the changes in period with amplitude that actually existed during the experiment. The occurrence of this period change is a measure of the torque that operates on the frozen moment. It is not a measure of the frozen moment itself.

Minimizing this torque is not only the way to improve the experiment. The most important single place to attack

the error problem is the timing of the switching circuit. During the experiment the compensation for the difference between the pull current and release current of the relay was not perfectly set. Because of overcompensation the switch was always operating a little too early. The experimental processes indicated by curves A, B, D, and E in Figure 10 all were performed this way.

The effect of the relay timing is also shown. Curves E and F show two processes which are the same in all respects except the timing. Curves A and E are approaching the same asymtote with the same early timing. After completing process E, the timing compensation was deliberately removed so that the timing would be very late. Curve F is approaching an asymtote that is much too large. Curve E was approaching one that is slightly too small. These results clearly emphasize the importance of precise switching.

PART V. CONCLUSION

The experiments gave rough agreement with the theory as to the magnitude of the effect. The result was 15% low for the 10^{-2} weber/m^2 driving field and 4% low for the 0.51×10^{-2} weber/m^2 driving field. The direction of driving torque was such as to produce an angular impulse on the superconducting sphere just as if the Faraday induction were operating on the positive ion lattice.

BIBLIOGRAPHY

(1) References partly or wholly of a general nature:
Burton, Grayson-Smith, and Wilhelm, "Phenomena at the Temperature of Liquid Helium," Reinhold Publishing Corp. (1940), Chapters 5 and 11.
H. Grayson-Smith and J. O. Wilhelm, Rev. Mod. Phys. 7, 1 (1935).
F. London, "Superfluids," John Wiley and Sons, Inc. (1950).

(2) H. K. Onnes, Leiden Comm., 122b, 124c (1911).

(3) H. K. Onnes, Proc. Acad. Sci., Amsterdam, 15, 1406 (1913).

(4) W. Meissner and R. Ochsenfeld, Naturwiss. 21, 787 (1933).

(5) D. Shoenberg, Proc. Roy. Soc., London, A 155, 712 (1936).

(6) W. deHaas and O. Guinau, Physica 3, 182 (1936).

(7) R. Peierls, Proc. Roy. Soc., London, A 155, 613 (1936).

(8) K. Mendelssohn, Proc. Roy. Soc., London, A 155, 558 (1936).

(9) A. Meshkovsky and A. Shalnikov, J. Phys., U.S.S.R., 11, 1 (1947).

(10) L. Landau, J. Phys., U.S.S.R., 7, 99 (1943).

(11) W. deHaas and O. Guinau, Physica 3, 534, (1936).

(12) J. De Launey, Naval Research Lab. Report No. P-3441, April, 1949.

(13) D. Shoenberg, Proc. Camb. Phil. Soc., 33, 260 (1937).

(14) N. Muench, Thesis, Rice Institute, 1950.

(15) A. Laufer, Amer. J. Phys., 19, 275 (1951).

(16) I. Kikoin and S. Gubar, J. Phys., U.S.S.R., 3, 333 (1940).

(17) W. Meissner, Sitz, Bayerischen Acad., pg. 321, Nov., 1948.

(18) P. Alers, J. McWhirter, and C. Squire, Phys. Rev. 84, 104 (1951).