ACADEMIA QUANTUM

Research Article
Published: 26 June 2026
https://doi.org/10.20935/AcadQuant8384

Bell's concept of local causality does not preclude Bell correlations in local realist field ontologies

Andrew Laidlaw[1,*]

Academic Editor: Yuhua Duan

Abstract

Introduction: Bell's concept of local causality assumes more than local action. It also presumes an ontology of point particles. Bell correlations are feasible in nonlinear field ontologies with quantised interactions between suitably correlated participants.

Materials and methods: Local causality is unsatisfactory for many reasons, not just Bell's Theorem. The EPR paradox is due to metaphysical overcommitment to point models. An alternative, distributed concept of long-range interaction is appropriate for field ontologies. Inherently distributed field interaction quanta modify the causal structure of relations between observables.

Results: *Causal structure of Bell measurements in de Broglie–Bohm EPR experiments:* Causal analysis of local realist field models violates Bell Inequalities without violating local action. *Experimental Tests:* Testable consequences include an observable range dependence of the coherence time of Bell states.

Conclusions: Local realist field ontologies are not ruled out by the existence of Bell correlations in nature. The only "conflict" between quantum mechanics and relativity is because lightcone causal analysis effectively presumes a particle ontology.

Keywords: *Bell's theorem, Bell inequalities, local causality, local action, nonlinear classical fields*

Citation: Laidlaw A. Bell's concept of local causality does not preclude Bell correlations in local realist field ontologies. *Academia Quantum* 2026;3. https://doi.org/10.20935/AcadQuant8384

1. Introduction

Various recent loophole-free EPR experiments [1–3] have secured the evidence for Bell spacelike causal correlations dating back decades [4–6]. Many arguments have been constructed, e.g., [7–10], to avoid the conclusion that nonlocal relations between observables exist in nature, which Norsen [11–13] and others have refuted, isolating the problem to locality. It seems that instant action at a distance is involved, which is considered impossible. An uneasy consensus has emerged—"Either locality or reality must fail"—amounting to a choice between *prima facie* incomprehensible positions. Intensive scrutiny of Bell's Theorem has thus reached an impasse [14, 15].

It will be argued here that the key, local causality assumption upon which Bell's Theorem rests [13] is fatally flawed because it assumes more than local action: it also implicitly presumes an ontology of pointlike particles. Once this restriction is removed, it is possible to violate Bell Inequalities without violating local action, making recourse to "spooky" nonlocal action at a distance [16], superluminal movements, or any other metaphysically exotic device, e.g., [17–21]. Nonlocal relations between pointlike observables can arise in local realist field models because restrictions imposed on interaction by the point particle concept, already associated with many other difficulties in Physics, e.g., [22, 23], do not apply to field–field interactions.

It has been widely conjectured, e.g., [24, 25], that Bell correlations can be explained by physical, local realist fields, but no conclusive results have been shown. As is well known, Einstein advocated repeatedly for the view that quantum mechanics could and should be replaced by some kind of local realist field theory [26–28]. This paper presents a simple proof of the conjecture, falsifying local causality, but the perspective here differs greatly from that of Einstein: there is simply no motivation to replace quantum mechanics because, when considered from a field ontology point of view, it already contains the physically coherent account he sought. Specifically, Quantum Electrodynamics (QED) exemplifies, in Section 2, how it is possible for Alice's spin measurement to exert an instant physical influence on Bob's electron without violating local action.

Causal analysis of local realist field models violates the CHSH Inequality [29] in Section 3.1. Such models satisfy the following three conditions:

1. *Local beables:* The ontology is specified on physical space.
2. *Local action:* Only colocated parts of the ontology can interact. Fields at different space points do not interact.
3. *No superluminal movements:* Nothing exceeds the characteristic velocity, *c*.

Since the definition of local realism is quite central, note that this *ontological*, classical field theory approach is conceptually distinct from (*epistemic*) "realism" in quantum mechanics, which

[1]Independent Researcher, Velez de Benaudalla, Spain.
*email: aa_laidlaw@yahoo.com.au

concerns the reality of observable properties rather than physical reality per se. As Redhead observed, ontological locality does not of necessity imply epistemological locality [30]. Bell introduced the term "beables" to highlight the distinction, which is crucial because the usual lightcone causal analysis has point events (which are not physical systems) emitting causal influences (which are). The relation between the event and the physical source of the causal influence is omitted. The analysis simply presumes that all the physical reality corresponding to an event (in the sense of the EPR sufficiency condition [31]) is well localised in its immediate vicinity. Note that remote parts of the ontology may correspond to an event without being causative of it. Lightcone causal analysis is thus restricted to pointlike models of the quanta, but this metaphysical construct precludes the observed correlations. Nonlinear pure field models, however, have a richer causal structure where, under strictly local evolution laws, nonlocal relations between observables can arise due to the inherently distributed nature of field—field interactions. It will be shown that Bell correlations in particular are feasible if the interactions are quantised and each of the participant fields contains *suitable correlations at a distance*.

Inherently distributed interaction quanta are already the norm in QED, where the standard analysis [32] treats the (virtual photon) interaction quanta as momentum eigensolutions—i.e., plane waves. The QED interaction mechanism is thus a prototype for distributed field–field interactions in the causal analysis of EPR experiments. The reasoning behind taking this ostensibly mathematical tool literally is discussed in Section 2, while preexisting correlations at a distance in the quanta are developed in Section 3.1.1.

A hidden-variables model for each of the four field subsystems in typical experiments (i.e., the two members of the entangled pair and the two measurement fields) is used for the causal analysis in Section 3.1. Since the fields in a pure field model extend indefinitely in space, the hidden variables are correspondingly distributed throughout the whole space. It is, in this sense, a nonlocal hidden-variables approach, which is well known to violate Inequalities [16]. There are, however, two important distinctions in the present approach that avoid nonlocality in the sense of nonlocal action.

First, local action means that fields at different space points do not interact. Local causality will be violated using only strictly local interactions. The hidden variables here are thus "nonlocal" only for not being well-localised in Alice's/Bob's vicinity. They will thus be more appropriately described as distributed hidden variables, rather than nonlocal ones. Second, there are no hidden variables for the measurement settings in Bell's Theorem. However, both parties to a distributed interaction must be distributed, so the use here is implicit in the basic notion of distributed interaction quanta.

Violating local causality without violating local action provides a simple explanation for EPR/Bell correlations without recourse to anything spooky, superluminal or exotic. Local causality formally enters Bell's Theorem [29, 33] via the factorisability assumption: probabilities factorise if Alice's result, A, and axis choice, a, do not influence B and b on Bob's side, and *vice versa* (apart from common information, λ). The EPR paper [31] is similarly based on "no influence". While the theorem is valid for point models with retarded interactions, the conclusion shown here is that this basic assumption is unsafe in field models. This is because distributed interactions between distributed fields have distributed impacts that arise in distant places at the same time. With distributed field—field interactions, lightcones emanating from point events are clearly inappropriate for causal analysis. Indeed, Section 3.1 involves lightcones from every point in the field, but this does not affect their *kinematical* role in the spacetime geometry, so this is all compatible with special relativity. Retarded interaction, local causality and lightcone causal analysis are all predicated on point beables (Section 2). Special relativity requires none of these vestiges of the classical model. Further, Lorentz Invariance is a property typically found in field theories; the interaction mechanism here is analogous to relativistic QED and correlations at a distance in individual quanta are maintained by Einstein self-synchronisation in Section 3.1.1, so special relativity is intrinsic to the present solution.

Section 3.2 concerns testability. Unlike earlier proposals such as [16–20], field models have testable consequences. Most notably, a theory-independent range dependence of the coherence time of Bell states is predicted, and the deviation from the usual model should be observable in experiments that can be done today. Section 4 discusses the failure of lightcone causal analysis, distinguishes the present causal structure from the analyses of Wood and Spekkens [34], and traces the emergence of space-independent properties from historical roots to local realist field models, as illustrated by two distinct approaches. The conclusions are presented in Section 5.

2. Materials and methods

2.1. Local causality is unsatisfactory

Before quantum mechanics, relativistic causality was once the notion that all observers should agree on cause and effect, but Lorentz observers agree on invariants and the temporal order of spacelike separated events is not invariant. Since Bell measurements commute, the fact that different observers may then assign cause and effect differently has no empirical content. Of course, this notion is now obsolete after redefining relativistic causality in view of the evidence from EPR experiments (by replacing the notion of cause and effect with that of signalling).

"Bell's concept of local causality" [13, 33] ("local causality" throughout this paper) is most closely tied to classical intuitions about interaction: causes and effects mediated by retarded signals traveling between well-localised entities. It thus belongs to the classical model which relied on the *dynamical*, retarded interaction assumption, whereas both the Einstein and Minkowski analyses of spacetime geometry are properly *kinematical*: there were no assumptions whatsoever about dynamics or causal relations. Retarded interaction mechanisms, however, are plagued by physical, theoretical and experimental difficulties, as follows:

Physical problems: First, energy–momentum conservation. The source cannot "know" where targets may be, so it has to radiate interaction mediating agents (fields or particles) in every direction, which requires a power source. Calling them "causal influences" changes nothing. There is no satisfactory resolution in classical electrodynamics. (Advanced waves were never considered satisfactory. They are also excluded here because **Equation (7)** becomes $\psi' = 2A\cos(kr)\, e^{i[\gamma\beta kx' - \gamma\omega t']}$, which neither solves the Schroedinger equation, as de Broglie waves do, nor produces

the observed matter beam interference phenomena [35]). Second, the linear momenta of radiated interaction mediating agents point away from the source, but the force between positively charged protons and negatively charged electrons acts towards the source. Third, since the source cannot know where or when retarded interaction mediating agents are absorbed, classical theory encounters insurmountable difficulties with the reaction momentum, which must be taken up by the fields, but how the linear momentum of the source responds is unclear. Inherently distributed interaction quanta resolve all these problems in Section 2.2.

Theoretical problems: The consequence of these problems was that, even in the simplest case of the two-body problem, classical mathematics broke down under dynamic conditions. Standard textbooks [36, 37] refer to early paradoxes with the Abraham–Lorentz self-force but this is the tip of an iceberg. Retarded interaction induced mathematical contortions at every turn, as evidenced by the collection of papers in ref. [23], which represents the state of affairs in 1972. For the editor, E.H. Kerner, progress was being made, but fifty years later the first problem in classical physics, the two-body problem, still cannot be formulated.

No support from modern physics: While the Liénard–Wiechert retarded potential produced some *useable* early results, special relativity showed, in particular, that the velocity field of the electron follows directly from the purely kinematical coordinate transformations, without using retardation. The velocity field co-moves with a charged body in a uniform condition of motion, so the first result from retarded time analysis was that the velocity field is not retarded.

With one stark exception, retarded interaction is conspicuous by its absence in modern physics: it is not used in gravity, quantum mechanics, QED nor any of the quantum field theories. As for the special theory, the redefinition of relativistic causality entirely removes it from modern physics, restoring to special relativity its original generality regarding causality.

The one exception is, of course, the EPR literature, where it remains as the basis for local causality [13], the "no influence" assumption, the factorisability of probabilities and the derivation of every known Bell Inequality.

Experimental facts: To test retarded interaction is nontrivial because the characteristic velocity is high, but two distinct forms of experimental evidence have been obtained. The first of these is, of course, EPR experiments, where it is now generally accepted that the facts cannot be explained by causal influences that propagate from Alice's lab to Bob's at or below *c*. While less definitive, precision measurements in gravity [38] show that the Earth accelerates towards the *instantaneous* position of the Sun, and not the *retarded* position as might be expected under retarded interaction. This is not unexpected as it corresponds to the usual practice in computational relativity, where the metric is calculated based on instantaneous positions.

The lack of aberration does not exclude a retarded at *c* influence [39]. Such complicated, retarded interaction accounts of instantly related facts were obligatory to reconcile relativity's speed limit with particle ontology. However, retarded interaction is extraneous in pure field ontology where comoving local realist field source terms can account for the facts directly, without retardation (similar to the velocity field of the electron in special relativity).

This generic, point-to-point form of interaction is thus an at best dubious anachronism. This contrasts with QED, which suggests a viable, distributed alternative appropriate for local realist field ontologies which is explored in the next subsection.

2.2. The interaction mechanism in Quantum Electrodynamics

The electromagnetic interaction between charged quanta in Quantum Electrodynamics (QED) is mediated by "virtual photons" with short lifetimes subject to the energy–time uncertainty relation. Feynman [32] originally set up QED on the basis of classical electrodynamics, with retarded interaction explicitly in mind. However, the retarded potentials are not used and his key calculations are done in the momentum basis, which circumvents the issue along the following lines.

A virtual photon becomes permanent—in the sense of having persistent observable consequences—only if it is absorbed by the target quantum during its brief lifetime. The principal benefit of this is to resolve the first of the physical problems in Section 2.1 above, energy–momentum conservation. The virtual photons propagate at the characteristic velocity, but they do not in general propagate from the source, A, to the target, B. Nor are they particles, in the usual atomist sense of well-localised corpuscles. They are instead to be thought of as momentum eigensolutions which permeate the whole space and might be propagating in any direction (NB: in a local realist field model, QED's unphysical infinite plane wave eigensolutions would be replaced by finite but unbounded planar waves). For an attractive force, as between an electron and a proton, there is a preponderance of absorbed virtual photons propagating in the direction from target to source: they approach the target from the "wrong" side. This resolves the second physical problem in Section 2.1, where the linear momentum of a retarded field could only point radially away from the source. Clearly, QED interactions in no way resemble retarded interaction.

The resolution that these inherently distributed interaction quanta provide for the third physical problem in Section 2.1—how to account for the reaction—is of the most interest here. A virtual photon that exists everywhere in space cannot emanate from a point source; nor can it be absorbed by a pointlike target. If the interactions are distributed fields so are the source and the target. Each one permeates the entire space, which is the view from quantum field theories. The Principle of Local Action is automatically satisfied, the quanta interact locally, everywhere in space, and retarded interaction is redundant. (NB: The impact of a point disturbance on remote parts of the same field remains retarded, as discussed in Section 2.4.)

Virtual photons are typically conceived of as a calculation device [40], or "just something in the middle of a calculation" [41], not to be taken as real entities. Similarly, there is no need to reify the virtual photon here in the sense of interaction as a separate entity that travels from one participant to the other. Rather, the QED mechanism corresponds to the direct exchange of inherently distributed interaction quanta between distinct, but interpenetrating, fields. What this paper takes seriously is the quantised nature of the exchange, not the question whether these physically real mediating entities enjoy a separate existence between emission and absorption.

While natural from a field ontology perspective, this QED-based concept of interaction is incongruous with particle ontologies so it had to be thought of conventionally as a merely mathematical construct. Meanwhile, retarded causal influences, implicit in particle ontologies, are highly problematic and experimentally falsified yet somehow remain the orthodox understanding of long-range interaction. Is this not a classic case of metaphysical overcommitment? The next subsection considers how inherently distributed, quantised field–field interactions modify the causal structure of relations between observables.

2.3. Basics for causal analysis of Bell measurements in pure field models

In continuously differentiable, local realist, pure field models of the quanta, there are by definition no particles only fields, and every field is defined on the whole space. While observers may associate (say) an electron with the specific, pointlike location where it is *found*, it is essential to note that it is *present* everywhere, so any interaction it participates in is, similarly, everywhere. Since the same applies to all quanta, especially those that constitute the experimental apparatus, one cannot arbitrarily divide the world into classical apparata that measure and quantum systems that are measured. In principle, Alice's and Bob's laser fields, detectors and qubits all share the whole space. The rationale for the conjecture [24, 25] is then evident, but Bell correlations require more than just "fields are everywhere" and "interactions are distributed".

When Alice measures her electron's spin in Section 3.1, the impact in Bob's lab must be (a) synchronised with the measurement (i.e., in the comoving frame of the entangled pair) and (b) correlated with the impact in her own lab. Distributed interaction quanta have impacts throughout space at the moment of transfer, providing synchronisation. When two fields, defined on all space, exchange an interaction quantum that is defined on all space, there is an instant change in both fields at every space point. In particular, the changes at points A and B, where Alice and Bob are located at the exchange time in the comoving frame, t_m, are spacelike separated.

As for correlated impacts, it is sufficient for there to be pre-existing correlations at a distance in each of the participant fields. To illustrate this, consider a trivial example. Let ψ_1 interact with ψ_2 by exchanging the interaction quantum ψ_3 such that $\psi_2(x,y,z,t_{m+}) = \psi_2(x,y,z,t_{m-}) + \psi_3(x,y,z,t_m)$ and $\psi_1(x,y,z,t_{m+}) = \psi_1(x,y,z,t_{m-}) - \psi_3(x,y,z,t_m)$, where t_{m-} and t_{m+} are before and after the interaction respectively. Now, to introduce correlations at a distance, let $\psi_i(x,y,z,t_{m-}) = \psi_i(t_{m-})$ for $i = 1, 2$ and $\psi_3(x,y,z,t_m) = \psi_3(t_m)$. We now have synchronised, correlated (identical in the example) impacts at points A and B, and note that there was no need for the measurement field, ψ_1, to be correlated with the measured field, ψ_2.

Of course this scenario, with space-independent fields, is not physically reasonable, but fields with the requisite space-independent *properties* (the phase of the quantum and the direction of its angular momentum density) are more than just physically reasonable; they are implied by the experimental fact of matter beam interference, as discussed in Sections 3.1.1 and 4.1.

2.4. Type I and Type II interactions in field models

Since the fields in any continuously differentiable field model of the quanta are defined on all space, so are any interactions between them. Rather than propagating from one "centre" to the other, interaction is distributed throughout space. However, this does not imply there is no retardation at all. Consider the electromagnetic interaction between two well-separated electrons, A and B. The primary field–field interaction is between A and B fields colocated at the same point in space. The resulting energy–momentum exchange is instantaneous in that the total linear momentum of each field system changes immediately. However, the linear momentum exchange disturbs the equilibrium between the parts that interacted and their neighbours in the same field, who are altered by the resulting internal stress imbalance. They then affect their neighbours, and so on, in a chain reaction that is limited by the finite speed, c, of local realist fields. There are thus two basic forms of local interaction ongoing at every space point: Type I: *instantaneous*, interactions between different fields at the same place; Type II: *retarded*, self-interactions distributing transients to different places in the same field. Bremsstrahlung radiation fits loosely into the second category, as an emission rather than a self-interaction.

3. Results

3.1. Causal structure of Bell measurements in de Broglie–Bohm EPR experiments

Lightcone causal analysis covers all possible causal influences within the lightcone. Similarly, the causal analysis in this section admits any causal influence within the logical structure of field–field interactions developed up to this point. However, in order to clarify the conceptual structure, specific Type I and Type II interactions will be constructed so as to induce Bell correlations without violating local action, thereby proving the conjecture [24, 25]: Bell spacelike causal correlations can arise from strictly local interactions in field models. These are intentionally idealised toy models, not candidate dynamical laws or physical theories. They are to be thought of as causal influences in general, not models of QED interactions in particular.

Following the standard convention, the entangled pair here is electron A and electron B, the experimenters are Alice and Bob, the measurement axes are a and b, and the measurement results are A and B. Spin measurements on different particles commute, so it can be assumed that Alice's measurement comes first. The near-simultaneous Bell measurements are spacelike separated. There are four field subsystems involved in the experiment, the two members of the entangled pair, and the two measurement fields, M_A and M_B, each of which is defined on all space. However, the focus for causal analysis will be on the space between A and B, conceptually divided into small, locally connected regions, or "space cells".

Each cell contains part of each field. There are then Type II retarded self-interactions within each field, between neighbouring cells, and Type I interactions between different fields in the same cell. (As discussed in Section 4, there is no contextuality and no

signalling because the Type I interactions are restricted to only the entangled pair and the usual measurement interaction between (say) Alice's electron and her measurement field, which does not interact with either Bob's electron or his measurement field, and *vice versa*.) As stated above, these are causal influences in general. Therefore, rather than specifying the form of interactions operating on nonlinear field variables, local evolution rules can be introduced that operate on relevant properties at the cell level, i.e., on the distributed hidden variables. The resulting distributed network of local causal connections is shown in **Figure 1**. Space runs horizontally across the page while hidden variables of the various fields colocated in the same space cell are in columns running vertically on the page. Alice is located at A on the left-hand side of **Figure 1**. Bob is at B on the right. The entangled pair is in the singlet state.

Now, in quantum mechanics, when Alice measures first, the singlet state is projected onto either $|AB\rangle = |\uparrow_a, \downarrow_a\rangle$ or $|AB\rangle = |\downarrow_a, \uparrow_a\rangle$ with equal probablility. Bob's measurement then projects B onto either $|B\rangle = |\uparrow_b\rangle$ or $|B\rangle = |\downarrow_b\rangle$ in accordance with

$$P(\uparrow_b |\theta_B) = cos^2\left(\frac{\theta_B}{2}\right) = \frac{1 + cos\,\theta_B}{2}\,, \tag{1}$$

where $\theta_B = a - b - \pi$ when $A = \uparrow_a$ or $\theta_B = a - b$ when $A = \downarrow_a$. Since Alice's result is equiprobable, $P(A = \uparrow_a) = P(A = \downarrow_a) = 0.5$, the correlation function is easily calculated using **Equation (1)**

$$C(a, b) = \frac{P_{\uparrow\uparrow} + P_{\downarrow\downarrow} - P_{\uparrow\downarrow} - P_{\downarrow\uparrow}}{P_{\uparrow\uparrow} + P_{\downarrow\downarrow} + P_{\uparrow\downarrow} + P_{\downarrow\uparrow}} = -\hat{\mathbf{a}} \cdot \hat{\mathbf{b}}\,, \tag{2}$$

where $P_{\uparrow\uparrow}$ is the probability of finding both $A = \uparrow_a$ and $B = \uparrow_b$ in a given trial and so on. There are various Local Hidden-Variable (LHV) toy models for **Equation (1)** in the literature, e.g., Bell's own illustration [33], so this equation isn't nonlocal.

The resolution of the EPR paradox thus reduces to the first step above: how can Alice's measurement project Bob's electron's spin onto her chosen measurement axis, a? In the next three subsections, local evolution rules are constructed to govern, respectively, pre-existing correlations at a distance in the quanta, spin measurements, and the projection of the remote member of the entangled pair. Again, these toy models serve only to establish the fact that Bell spacelike causal correlations can in principle be realised in field models without violating local action, as defined in the introduction.

3.1.1. Correlations at a distance in the quanta

Instant correlations at a distance sustained by local (nearest-neighbour) evolution rules have already been found in a different, digital context [42]. Given the field models context, the presence of interference fringes in matter beam interferometry [35] requires phase and amplitude correlations at a distance. See also Section 4.1 on the origins of space-independent properties. This subsection shows that pre-existing correlations at a distance suitable for the causal analysis are physically reasonable.

The field angular momentum (density), $\vec{\lambda}$, of the electron and a space-independent phase, ϕ, discussed in Section 3.1.2 are represented as distributed hidden variables in **Figure 1**. Since aligned magnetic fields are a low-energy state, the angular momentum density of an electron will point in the same direction everywhere in the field. Importantly, if this applies to one quantum, it applies to all, including the measurement fields, which are magnetic fields related to angular momenta of quanta with their own sets of distributed variables. The measurement axes, $\hat{\mathbf{a}}$ and $\hat{\mathbf{b}}$, are thus associated to hidden variables defined in every space cell. This is the meaning of *"suitable correlations"* in Section 1: in a spin measurement, the same measurement axis interacts with the same angular momentum direction at every space point. Measurement interactions then display correlations at a distance which will be necessary for spacelike causal correlations between measurement results.

$\vec{\lambda}_{Ai}$ is then the value of $\vec{\lambda}_A$ in the ith cell of Alice's electron A; $\hat{\lambda}_{Ai}$ is the corresponding unit vector. Similarly for electron B. Experiments typically use angles in the same plane, so in **Figure 1**, $\hat{\mathbf{a}}_i$ and $\hat{\mathbf{b}}_j$ are just angles, a_i and b_j, in the range $[-\pi, \pi]$. A local realist mechanism is required to regulate the evolution of these distributed variables. Otherwise, correlations would degrade over time due to environmental noise. This is a retarded, nearest-neighbour evolution rule corresponding to the Type II self-interactions in Section 2.4. A simple proportional control mechanism illustrates this:

$$\frac{d\vec{\lambda}_{Ai}}{dt} = \alpha((\vec{\lambda}_{Ai+1}(t_r) - \vec{\lambda}_{Ai}(t)) + (\vec{\lambda}_{Ai-1}(t_r) - \vec{\lambda}_{Ai}(t)))\,. \tag{3}$$

where $t_r = t - r_s/c$ is the retarded time, r_s is the cell spacing, c is the characteristic velocity and α is a constant. Similarly for $\vec{\lambda}_{Bj}$, a_i, b_j, ϕ_{Ai} and ϕ_{Bj}. Correlations at a distance emerge from random initial conditions. Unlike [42], where loops in a digital algorithm act on digital cell contents to construct a finely correlated structure, this analogue control erases any such structure by reducing the local error gradient everywhere, removing decorrelations. Fine tuning [34] is thus not required. It is straightforward to verify the stability of **Equation (3)** for small β, and that correlations emerge from random initial conditions, with the discrete time-version, $\vec{\lambda}_{Ai}(t_{n+1}) = \vec{\lambda}_{Ai}(t_n) + \beta\Big((\vec{\lambda}_{Ai+1}(t_n) - \vec{\lambda}_{Ai}(t_n)) + (\vec{\lambda}_{Ai-1}(t_n) - \vec{\lambda}_{Ai}(t_n))\Big)$, where the timestep, $(t_{n+1} - t_n)$, is of the order r_s/c and β is a constant. Note that Einstein synchronisation is automatically embedded by the phase control: as the condition of motion changes, the synchronisation of the field self-adjusts, enforcing the relativity principle throughout.

As discussed below, if the measurement model, **Equation (4)**, were affected by noise, the details of **Equation (3)** would become important, but **Equation (4)** will produce the same result in every cell, so the exact form of **Equation (3)** is not relevant. Such an algorithm smooths out perturbations due to noise. Note that the speed of the control algorithm is inevitably limited by the speed of light, far slower than would be required for any impacts on cells near Alice to influence cells near Bob within the time window of the Bell measurements [1]. Thus, all that is being asserted here is that strictly local internal self-interactions can maintain correlations at a distance within each field over extended periods of time.

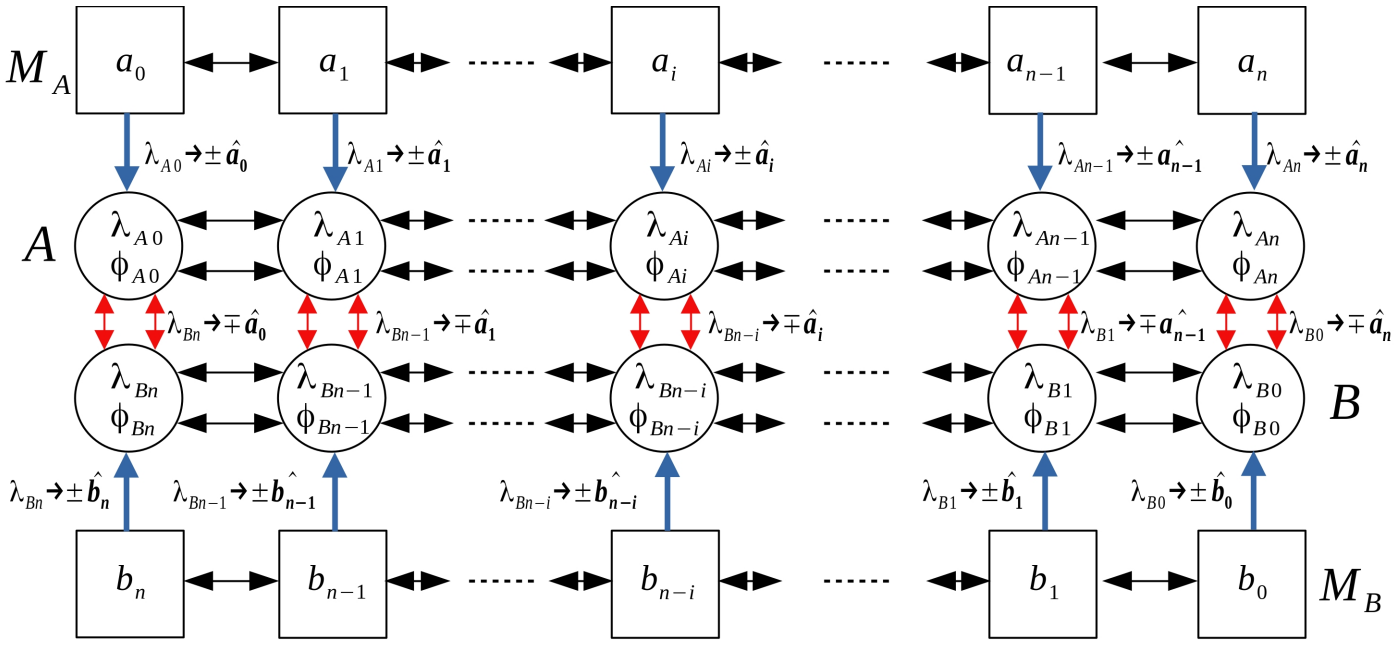

Figure 1 • Causal structure of distributed, local realist Bell measurements. Each column shows the fields colocated in a space cell, one from each of the four subsystems involved in the Bell measurement. The two measurement fields (squares) are M_A and M_B (first and last rows) and the two entangled electrons (circles) are A and B (middle rows). Indices run away from each experimenter, so that corresponding pairs sum to n in every cell. Horizontal black arrows show the (Type II retarded) nearest-neighbour interactions regulating distributed hidden variables within each subsystem. Type I measurement interaction quanta, transferred at t_{mA} and t_{mB}, are represented by blue vertical arrows between squares and circles. The Type I entanglement bonds are shown as red vertical arrows between circles, ensuring that, at the first measurement (Alice's), $\hat{\lambda}_B = -\hat{\lambda}_A$ and $\phi_A = \phi_B = \omega_\sigma t$. At Alice's measurement, $\hat{\lambda}_A \to \pm\hat{\mathbf{a}}$ and $\hat{\lambda}_B \to \mp\hat{\mathbf{a}}$ due to the entanglement bonds, which are then broken. At Bob's, $\hat{\lambda}_B \to \pm\hat{\mathbf{b}}$. Reprinted from [43].

3.1.2. A distributed spin measurement model

It is not sufficient for Alice's measurement to act only on the near field of her electron. Any effects there may be of her measurement in those cells cannot affect anything in Bob's vicinity within the light time from A to B, so her spin measurement must be distributed, and a and b in **Figure 1** have to be distributed variables. The Type I measurement interaction then acts in parallel on both her near and far fields, but this involves two complications from a local realist point of view, which must be resolved in distributed action models of **Equation (1)**. These are the "synchronisation" problem and the "aggregation" problem.

First, the measurement interactions must all happen, everywhere in space, at the same time, t_{mA}. The requisite synchronisation is inherent in the concept of distributed interaction quanta, transferred as single wholes at t_{mA}—see Section 2.

Second, if the *probabilistic* **Equation (1)** were to operate in cells at Alice's measurement, in some cells $\vec{\lambda}_{Ai}$ rotates towards $\hat{\mathbf{a}}_i$, in others toward $-\hat{\mathbf{a}}_i$. (Note that θ_{Ai}, the angle between $\hat{\lambda}_{Ai}$ and $\hat{\mathbf{a}}_i$, replaces θ_B in **Equation (1)** here.) Now, the cells are arbitrarily small and they occupy the whole space, not just the line betweeen A and B, so there is a great number in any space region. Unless θ_A is exactly equal to $\pi/2$ (which has probability 0), the control algorithm, **Equation (3)**, (acting as an Ising model) could produce the same result in every small space region, many orders of magnitude faster than the light time from Alice to Bob, so this is not, of itself, an obstacle. However, if $P_{cell}(\uparrow) > 0.5$ in **Equation (1)**, **Equation (3)** forces the whole electron into the $|\uparrow>$ state with probability 1, which does not yield the desired result, **Equation (1)**. The aggregate result for the whole electron cannot be implemented as a simple majority of random cell-level results, which is the aggregation problem. In order to reproduce the quantum predictions correctly, $P(\uparrow\ |\theta)$ in **Equation (1)** must be the probability that the same result is obtained in at least a majority of cells. Without excluding the possibility of an objective probability resolution, this is satisfied if the same result is obtained (independently) in every cell. This is illustrated here by a local, *deterministic* but *time-dependent* toy model of spin measurements that produces the same result in every cell. Let the outcome of Alice's measurement in the ith cell be

$$A_i = SGN[sin\,(\omega_{\sigma i} t_{mA}) - f(\theta_{Ai})]\,, \tag{4}$$

where t_{mA} is the measurement time and ω_σ is a frequency associated with the time dependence of the result, common to all cells, $\omega_{\sigma i} = \omega_\sigma$, with a space-independent phase $\phi_A = \omega_\sigma t$, as shown in **Figure 1**. This model is just a sinusoid offset by some function of the angle between the distributed hidden variable, $\vec{\lambda}$, and the measurement axis, a, then sampled at the effectively random time, t_{mA}, which is Alice's measurement time. If the sample is +ve, the cell result is ↑; if it is −ve, the cell result is ↓. Finally, **Equation (4)** implies $P(\uparrow\ |\theta_{Ai}) = (\pi - 2sin^{-1}f(\theta_{Ai}))/2\pi$. Since $\hat{\lambda}$, ϕ and a are the same in all cells due to **Equation (3)**, the same result is produced in all cells, with no need for any post-measurement clean-up by the control algorithm, **Equation (3)**. As mentioned in Section 3.1.1, the details of the control algorithm become irrelevant. Substituting **Equation (1)** in the preceding expression, $f(\theta_{Ai}) = sin(-\frac{\pi}{2}cos\,\theta_{Ai})$ ensures that this result, which is now simply the aggregate result for the whole electron, is in accordance with the usual quantum probability, **Equation (1)**, so distributed spin measurements are physically reasonable. Let it be emphasised that the illustration, **Equation (4)**, is not intended faithfully to represent whatever reality may correspond to spin measurements in quantum mechanics, QED, or any other theory.

The spin observable can then be read out in various ways in practice. For example, Ref. [1] uses spin-dependent fluorescence where one of the result states produces photons that are routed to a detector, but the other does not.

A final point to consider briefly is the fact that the axis choices, a and b, are routinely made just prior to the first measurement, with choices on each side spacelike separated from interventions on the other, as is the case in [1]. This does not pose a problem because any physical implementation of the axis choices necessarily involves distributed, quantised Type I processes, same as the spin measurements. The distributed variables, a and b, are then necessarily set up in a distributed way.

3.1.3. Entanglement bonds: projecting Bob's electron

In the singlet state, Bob's electron is in a special "entangled" relationship with Alice's, where the total angular momentum of the pair vanishes. The singlet state has a long lifetime relative to the timescale of the microprocesses involved—ranging from milliseconds up to seconds. Maintaining phase coherence, and the counteraligned angular momenta, in a noisy environment [44, 45] thus requires an ongoing interaction between the electrons forming the entangled pair, the basis for which is that counteraligned magnetic fields are also a low-energy state. Note that the associated binding energy of the entangled state, E_B, implies the noise immunity is finite, as discussed in Section 3.2. Thus, $\hat{\lambda}_{Bj} = \hat{\lambda}_{Ai} + \pi$ in **Figure 1**, for $j + i = n$. (i.e., $\hat{\lambda}_{Ai}$ and $\hat{\lambda}_{Bj}$ are colocated in the same space cell.) This implies a Type I interaction operating between those parts of electrons A and B that are colocated in the same space cell, maintaining the phase relation while $\hat{\lambda}$ is kept equal but opposite: $\hat{\lambda}_B = \hat{\lambda}_A + \pi$. This is shown in **Figure 1** as the "entanglement bonds" linking Alice's electron to Bob's in every space cell, resulting in a two-particle system with zero total angular momentum. This is illustrated by a local evolution rule analogous to Hooke's Law:

$$\frac{d\hat{\lambda}_{Ai}}{dt} = -\frac{\kappa_{ij}}{|\vec{\lambda}_{Ai}|}\,\Delta\hat{\lambda}_{ij} \;\; ; \;\; \frac{d\hat{\lambda}_{Bj}}{dt} = \frac{\kappa_{ij}}{|\vec{\lambda}_{Bj}|}\,\Delta\hat{\lambda}_{ij} \;, \tag{5}$$

where $j + i = n$, κ_{ij} is a constant and $\Delta\hat{\lambda}_{ij} = \hat{\lambda}_{Ai} - (\hat{\lambda}_{Bj} - \pi)$ is the angular (counter)alignment error in the cell in question. Similarly for the phase control. It is important to note that, unlike **Equation (3)**, there is no retardation involved in **Equation (5)**: in every small space region, $\hat{\lambda}_B$ tracks local changes in $\hat{\lambda}_A$ and *vice versa*. In Alice's spin measurement above, the distributed interaction, **Equation (4)**, between M_A and electron A caused its angular momentum density, $\vec{\lambda}_A$, to rotate, all over space, as a single whole, until it aligned or counteraligned with a. Now, $\vec{\lambda}_B$ simply tracks $\vec{\lambda}_A$ (locally everywhere), so it becomes counteraligned or aligned along a. The distributed entanglement bond thus enables both electrons to be projected at the same time, t_{mA}. **No mediating causal influence propagates from A to B.**

Entanglement bonds are physically reasonable. Only colocated entities interact, and the (magnetic) basis for interaction is well known. However, the question why this manifests only with entangled states is pertinent. Why does Alice's measurement not project every other electron as well as Bob's? Clearly, this form of interaction is significant only for coherent states that share the same phase. Otherwise relations between the A and B fields are time-variable, and rather than binding, the interaction produces rapidly fluctuating, incoherent effects indistinguishable from environmental noise. While the illustration of **Equation (5)** is not to be thought of as representing reality literally, such coherent interactions were not known in classical physics, so it is especially significant that the entanglement bonds concept has testable consequences, as discussed in Section 3.2.

To summarise the steps in a Bell measurement, when Alice measures first, **Equations (4)** and **(5)** combine to project the two-particle entangled state onto either $|AB\rangle = |\uparrow_a,\downarrow_a\rangle$ or $|AB\rangle = |\downarrow_a,\uparrow_a\rangle$ with equal probablility. Then, when Bob measures, **Equation (4)** projects the B spin state onto either $|\uparrow_b\rangle$ or $|\downarrow_b\rangle$ in accordance with **Equation (1)**, where $\theta_B = a - b - \pi$ or $\theta_B = a - b$, depending on Alice's result. Using **Equation (2)**, this reproduces all the usual quantum predictions for any choice of the measurement settings, a and b. Bell Inequalities are thus violated in this local realist field model, and local causality has failed.

3.2. Experimental tests

3.2.1. Range dependence of the coherence time of bell states

Hypothesis 1: The lifetime of the entangled Bell state is fully determined by the decoherence time for individual qubits.

Testability is a core consideration in physics that is often overlooked in the literature. While various alternative resolutions to the EPR paradox have been proposed, including ("spooky") violations of local action [16], retrocausality [18], "Reality fails" (counterfactual indefiniteness) [19], many worlds [20], superdeterminism [42], conspiracy/contextuality [21] and more, the common hallmark is that there are no experimentally falsifiable new predictions. In contrast, local realist fields involve new predictions that are testable in experiments we can do today.

This subsection considers various noise mechanisms that impact the coherence time of Bell states. There is, in particular, a testable, range-dependent effect which should be observable. The prediction is significant because in the usual model the RHS of the CHSH Inequality, **B**, scales as $2\sqrt{2}\,e^{-2t/T_{coh}}$, where T_{coh} is the qubit coherence time and t is the time between initial preparation of a superposition state and the Bell measurements. There is no range dependence involved: **B** depends only on the single-qubit coherence times, and not on the distance from Alice to Bob. In field models, at least one range-dependent mechanism modifies this relation in the general case, i.e., independent of the toy models **Equations (3)–(5)** and unrelated to the binding energy effects discussed below. Modern experiments are, however, typically conducted with very long coherence times, $2t/T_{coh} \ll 1$, where decoherence can be ignored and the predicted range effect is not usually significant.

When Alice's measurement simultaneously projects the near and far fields of electron A, the far field receives no control from the near field during the interval $\tau = r/c$ prior to the measurement, where r is the Alice-to-Bob range. Due to this control lag, the unaggregated results near Alice and near Bob can differ at long range. When her result is $\uparrow_a$, Bob's electron is then sometimes projected onto $|\uparrow_a\rangle$ instead of $|\downarrow_a\rangle$. While this paper concerns causal relations, not noise models, heuristic considerations quantify this effect sufficiently to establish that it is observable in experiments with significant decoherence, $t \gtrsim T_{coh}/20$. Experimental confirmation of this effect would strongly favour a local realist field

explanation of Bell correlations. Note that perturbations prior to $t_{mA} - \tau$ are not involved in the following first estimate.

The parameter T_{coh} was developed from the interplay of experiment and theory to describe the half-life of one-qubit superposition states but, in the above scaling relation, it directly concerns outcome probabilities: the correlation functions, $C(a, b)$, scale as $e^{-2t/T_{coh}}$ for all settings (a, b). Noise impacts on the measurements being uncorrelated, each of the two measurements contributed a factor of $e^{-t/T_{coh}}$. The range-dependent effect above similarly involves two correlated measurement interactions in the presence of uncorrelated noise: the one in Alice's near field yields her result, while the other, in her spacelike separated far field, projects Bob's electron. Now, in field models in general, the finite energy of a quantum is given by the space integral of the energy density. For this integral not to diverge as $r \to \infty$, the far-field energy density asymptote can be no stronger than $1/r^4$ (corresponding to $1/r^2$ force fields), with the consequence that the field energy is highly concentrated in the near field region. T_{coh} is then dominated in field models by terms from the near-field region (consistent with the fact that cryogenic cooling of only this region increases the coherence time). Since T_{coh} characterises near-field decorrelation, it follows that Alice's near-field measurement introduces into the scaling an extra factor of $e^{-\tau/T_{coh}}$ for the new range effect.

As for the far field, the total noise power is another finite integral over all space. Since the environmental noise is uniformly distributed (modulo cryogenic cooling), terms in the integral must be weighted by a function with a finite space integral, i.e., a function proportional to the energy density, but the rotational inertia associated with the field angular momentum density is also, necessarily, proportional to the field energy density. Noise-induced perturbations of its direction, $\hat{\lambda}$, are thus independent of the energy density, and environmental noise induces similar (but uncorrelated) angular perturbations in the near and far fields. The far-field measurement interaction then introduces a second factor of $e^{-\tau/T_{coh}}$. Consequently, $\mathbf{B}$ scales overall as $\sim 2\sqrt{2}\, e^{-2(t+\tau)/T_{coh}}$. **Figure 2** compares this modified scaling relation with the usual model ($\tau = 0$) for the experimentally accessible range. This estimate may understate the effect: no control algorithm could perfectly equilibriate all perturbations prior to $t_{mA} - \tau$ and phase noise has been ignored. A specific case is calculated next for $t = T_{coh}/20$ and $\tau/T_{coh} = 4.3/96 = 22.3$.

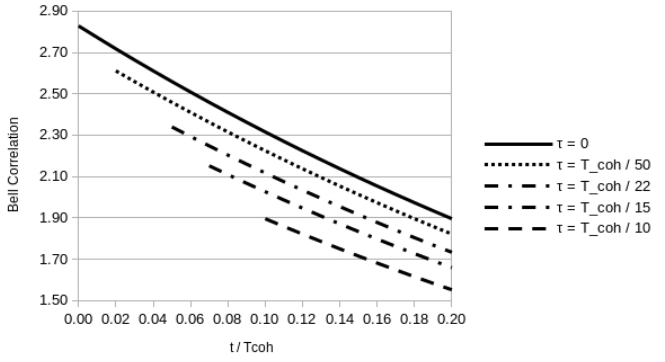

Figure 2 • Bell correlation, $\mathbf{B}$, vs. time (t/T_{coh}) at various τ/T_{coh} for $t > \tau$.

The predicted range effect is observable, as follows. In an otherwise ideal experiment, $2t/T_{coh} = 0.1 \Rightarrow \mathbf{B}_{ideal} = 2.56$. Let $t_{1.3}$ be the minimum delay for a Bell test at 1.3 km, the Alice-to-Bob distance in [1]. $\tau = 4.3$ μs, while the fibre delay from Alice or Bob to the midpoint is $1/2\ (\tau/0.66) \sim 3.3$ μs. The protocol, RNG and rotations add less than 1.5 μs, yielding $t_{1.3} \sim 4.8$ μs. T_{coh} can be controlled by modifying the schedule of interventions used to extend the coherence time or by introducing magnetic noise at the Alice and Bob sites, so choose $T_{coh} = 20$ $t_{1.3} = 96$ μs. With the range-dependent term in the scaling, $\mathbf{B}_{ideal}$ becomes 2.34 instead of 2.56, a readily observable difference. Alternatively, if Alice and Bob wait for event ready (doubling the light time in fibre), $t_{1.3} \sim 8.1$ μs, choose $T_{coh} = 162$ μs, and $\mathbf{B}_{ideal} \Rightarrow 2.43$. The new term in τ would still be observable, and would likely remain so even without including the far-field decorrelation.

Additionally, as a consequence of the far-field energy density asymptote, the strength of the entanglement bonds and hence the "spring constant", κ, and the binding energy, E_B, in Section 3.1.3 vary as $1/r^2$ with the range, r, from Alice to Bob. There are then further two-particle, range-dependent noise mechanisms related to the increasing fragility of the entangled state and the control lag between the A and B near-field regions, which causal analysis does not quantify. Qualitatively, however, the lifetime of the entangled state will be range-dependent in field models. Extending the range further is challenging. In [1], for example, the protocol success rate was 6.4×10^{-9} and it took 220 h to run the experiment. r was 1.3 km, with 8 dB per kilometre fibre losses. Cavities may improve the protocol success rate by a couple of orders of magnitude [46], adding at most a few kilometres to the maximum practical range for Bell tests with electrons. While entanglement has been reported at 100 km [47] and beyond (although noise characteristics in photon systems may differ) and binding energy effects have not been found in Bell tests to date, present experiments simply do not test for the possible onset of these effects: the Bell measurements are performed immediately after event ready, minimising t with spacelike separation of a and b in mind. However, spacelike separation is not relevant for testing noise performance. The usual scaling relation, $2\sqrt{2}\, e^{-2t/T_{coh}}$, should also be tested at long ranges with maximum delay, t, between preparation and measurement: at short range, say $r = 10$ m, set $t = T_{coh}/20$ so that $B_{ideal} = 2.56$. Then increase the range in stages, holding t constant in order to observe B vs. r.

Field ontologies would be strongly favoured if the hypothesis above is falsified in either of these two experiments.

3.2.2. A measurement problem test

Hypothesis 2: The entangled state is not projected until classical information for the result becomes available in principle.

While the model in Section 3.1 has shown that nonlocality can be implemented in "local realism" (as defined in Section 1), the qubit state was projected above by the "measurement field", whereas the lasers prevalent in modern experiments are often thought of as entangling with the qubit, with state projection associated with detecting or absorbing corollaries of measurement, like the fluorescence photons in [1]. Straightforward modifications of the causal model can cover the various "measurement problem" scenarios, as follows: events such as an "UP" detection by Alice correspond to the distributed change in the A photon field upon its distributed interaction with distributed A detector quanta; the A photon field collapse projects the A qubit state, which is tracked by B, and so on. The causal analysis thus does not address the

measurement problem, but experimental insight is available. The following experiment decides between the "classical information projects" scenario and others where collapse is triggered either by the laser field or by any absorption of a corollary photon.

If measurement procedures are performed without detectors, no classical information is possible and there should be no state reduction under the hypothesis, which can thus be tested by performing two rounds of Bell measurements—first with detectors off, then with detectors on. Different measurement axes should be used for the second round, as follows: in [1], after event ready, rotate A by a_1 where $a_1 \epsilon \{a, a'\}$, detectors off, laser fluorescence on for 1 microsecond, laser off, rotate A by $a_2 - a_1$ where $a_2 \epsilon \{a'', a'''\}$, detectors on, laser on, record measurement result. Similarly on Bob's side. Spacelike separation is not required. The hypothesis is falsified if the results do not violate Bell Inequalities.

4. Discussion

The very specific purpose here was to show that the local causality assumption in Bell's Theorem is unsafe; there is no in-principle conflict between the experimental facts and local realist field models (as defined in Section 1) in general. It is sufficient for that purpose to show that at least one model exists and the validity of toy mechanisms like **Equation (4)** or **Equation (5)** is not relevant. By no means does this show that "physical reality is a local realist field system", only that the existence of Bell correlations in nature does not rule such field ontologies out.

Bell/EPR correlations defied explanation for so long mainly because the usual lightcone causal analysis is based on an idea that is clearly irrelevant: "Any effect of a point event must lie in its future lightcone". The effects of pointlike observable events—e.g., "Alice's UP detector clicks"—are simply irrelevant. Only the effects of the interaction between her electron and her measurement field were relevant in Section 3.1, and the pointlike nature of her observable result in no way implies the measurement interaction itself is pointlike: the pointlike observable is caused by this interaction, not *vice versa*. Lightcones emanating from point events reverse the order of cause and effect with the result that any part of the measurement interaction that is spatially separated from the event is excluded from the causal analysis. In particular, the interaction between those parts of Alice's electron and measurement field that were already in Bob's lab before her measurement is excluded, rendering the phenomena unintelligible. By contrast, in this paper, the physical state of affairs in Bob's lab simply coevolves with that in Alice's lab, without any causal influence that travels from her lab to his.

Figure 1 changes the standard causal structure of Bell tests in Figure 19 of [34], corresponding to Bell's notion of local causality, into Figure 25b, which Wood and Spekkens associate with a superluminal causal influence, which it is argued implies signalling. The key distinction is that, with the distributed causal influences here, there are no implications of signalling.

Hidden variables are hidden, meaning that they cannot be directly observed, only indirect consequences, but this is not sufficient to forbid signalling in the most general case. There could in general be, for example, a Type I interaction between Alice's measurement field and Bob's electron (so her measurement would affect Bob's electron's state without entanglement and repeated interventions could be used to communicate with high probablility), or even contextuality between her measurement field and Bob's. Because such interactions are not involved in **Figure 1**, the indirect consequences of the hidden variables from one side to the other can only be mediated by the entanglement, which does not signal in individual trials and cannot be restored faster than the light time. This contrasts with the idea of superluminal signals emitted by measurements, which would not depend on entanglement and would be functionally equivalent to the excluded Type I interactions above.

Those interactions are excluded, however, on physical grounds, not merely to avoid complications. The interactions in **Figure 1** are physically well motivated. Alice's measurement field and electron can interact because the field energy of both parties is predominately in her lab. The entangled pair interacts, despite there being little energy density overlap, because coherence dramatically improves the effective signal-to-noise ratio between binding interactions and noise. There being no plausible physical mechanism by which Alice's measurement field could interact with Bob's electron, or any other system in his lab, it would be overly speculative if such possibilities had been required for the causal analysis. Note, however, that this still leaves open the question in [34] of whether no signalling is fundamental or merely a contingent feature of the world.

Finally, no fine tuning or conspiracy was required in Section 3.1.1 for the pre-existing correlations at a distance in the quanta because, rather than constructing correlations, the control algorithm **Equation (3)** merely removes decorrelations from the distributed, single whole oscillations that constitute the quanta. The emergence and maintenance of such correlations is a familiar feature of wave systems, where spatially extended order arises from strictly local dynamics. Likewise, long-range correlations are ubiquitous in field solutions. This is not regarded in field theory as a "conspiracy". It is a standard feature. While using the discrete time version of the control algorithm in Section 3.1.1 does not *prove* that correlations *must* emerge from *any* initial condition, unlike [42] the control system is actually immune to "adverse" fine tuning (the possibility of constructing pathological initial conditions from which correlations do not emerge) because environmental noise ensures that the detailed evolution of the quantum wanders off from any specific course it might have been on.

4.1. Space independent properties in field ontologies

Quantum mechanical descriptions are written in state spaces, not physical space. The phase of the quantum is then implicitly a space independent property of the whole in contrast with the standard travelling wave, $e^{i(\mathbf{k}\cdot\mathbf{r}-\omega t)}$, where the phase explicitly depends on position. This subsection recalls the historical origin of space independent properties, reconciles this background with the usual notion of fields propagating in physical space, and notes two distinct physical model approaches.

The space independent phase was introduced several years before quantum mechanics by de Broglie, who considered the Lorentz transformation of the "periodic phenomenon" $\cos \omega t$ to an observer moving at speed v [48], which produced the superluminal de Broglie phase wave, the real part of $e^{i[\gamma\beta kx' - \gamma\omega t']}$, where γ is the Lorentz factor, $\beta = v/c$ and $k = \omega/c$ is the wave number corresponding to the radian frequency of the electron, ω. He explained his proposed space independent periodic phenomenon,

$\cos \omega t$, with a mechanical analogy involving a large, horizontal circular disk from which identical weights are suspended on springs. The number density of these spring oscillators diminishes as one moves away from the center of the disk into the far field. All oscillators have the same period so that, when set in motion with identical amplitudes and phases, the surface passing through the center of gravity of the weights would be a plane oscillating up and down [48].

To develop, very briefly, a sketch of space independent properties with propagative fields, consider the general case of the superposition of two scalar waves of the form: $\psi_n = A_n\, e^{i(\mathbf{k}_n \cdot \mathbf{r} - \omega_n t)}$ where $n = 1, 2$, $\omega_n/k_n = c$, $A_n = A(r)$ and $\omega_1 = \omega_2 = \omega$ for one set of observers for whom the frequency, ω, is a constant. For these observers, the superposition is:

$$\psi = \psi_1 + \psi_2 = A(e^{i\phi_1} + e^{i\phi_2}) = 2A\, cos\left(\tfrac{\phi_1 - \phi_2}{2}\right) e^{i(\phi_1 + \phi_2)/2}, \quad (6)$$

where $\phi_n = \mathbf{k}_n \cdot \mathbf{r} - \omega_n t$. Consider how this system appears to an observer moving at speed v in the -ve x direction, whose coordinates are (x', y', z', t') (The primed frame is moving in the -ve x direction of the unprimed frame, otherwise frames are in standard configuration). Writing the wave vectors in coordinate form as $\mathbf{k}_n = \sum_{j=1}^{3} k_{nj}\hat{x}_j$, the relativistic Doppler shift gives the frequencies in the primed frame, $\omega'_n = \gamma\omega(1 + \beta\, cos\, \theta_n) = \gamma\omega(1 + \beta k_{n1}/k)$, where $\beta = v/c$, $\gamma = \sqrt{1/(1-\beta^2)}$ and θ_n is the angle between $\mathbf{k}_n$ and the x-axis. Relativistic aberration then provides the wave vectors: $\mathbf{k'}_n = \gamma(\beta k + k_{n1})\hat{x}'_1 + k_{n2}\hat{x}'_2 + k_{n3}\hat{x}'_3$. Upon substituting in **Equation (6)** the superposition for primed frame observers can be written in a mixed frame form that reveals conditions on the unprimed frame that are necessary to observe matter beam interference phenomena in the primed frame:

$$\psi' = 2A\, cos\left(\frac{(\mathbf{k}_1 - \mathbf{k}_2)\cdot \mathbf{r}}{2}\right)\; e^{i[\frac{1}{2}(\mathbf{k}_1 + \mathbf{k}_2)\cdot \mathbf{r}]}\; e^{i[\gamma\beta k x' - \gamma\omega t']}, \quad (7)$$

where the last term on the RHS is the de Broglie wave. It is easily shown that **Equation (7)** neither solves the Schroedinger equation nor reproduces the familiar matter beam interference patterns [35] unless both of the two preceding terms are equal to unity, yielding $\psi' = 2A\; e^{i[\gamma\beta k x' - \gamma\omega t']}$. This can only be met if $\mathbf{k}_1 \cdot \mathbf{r} = \mathbf{k}_2 \cdot \mathbf{r} = 0$. The entire wavefield then evolves under rotations in the unprimed frame. Any trajectory of the wave vector lies on the surface of a sphere at rest in this frame, which is therefore the comoving frame of the modelled particle. Now, in special relativity, particles in a uniform condition of motion evolve internally under elements of the little group of transformations that preserves the linear momentum [49, 50]. In the comoving system, the little group reduces to the ordinary rotations, SO(3), so internal movements lie on the surface of a sphere. There is thus a direct correspondence between matter beam interference phenomena, de Broglie waves and the little group.

The dimension of spheres in the comoving system is a constant, r_s, fixed in the vicinity of the reduced Compton wavelength, $r_s \sim \lambda\!\!\!^{-}_c$, by the Planck relation $E = \hbar\omega = hc/\lambda = mc^2 \Rightarrow \lambda = h/mc$, and the resonance condition, $n\lambda = 2\pi r_s$ for a simple circumferential trajectory, or $n\lambda = 2\pi a r_s$ for more plausible curvilinear trajectory geometries, where a is a geometry factor. This is many orders of magnitude below the length scales associated with slit systems in matter beam interference experiments or the distance between Alice and Bob in an EPR experiment: The field must permeate the whole space. Satisfying the little group thus requires a field system with closed wave trajectories lying on spherical surfaces of dimension r_s, whose centres are continuously distributed throughout space. (Note here that the Lorentz group is a subgroup of the Poincaré group). The angular momentum associated to these resonant trajectories induces a distributed field angular momentum density, which is the second distributed hidden variable in Section 3.1, whose direction, $\hat{\lambda}$, was a space independent property.

Another approach, by Battey-Pratt and Racey, describes a geometric model of the Dirac particle [51], wherein the spacetime continuum "wobbles" in a distributed cyclical wave resulting from the SU(2) group, producing an "undulating wavelike region" ([51], p. 450), characterised by a single phase, as per the causal analysis of Section 3.1. There may well be other approaches, with no preference here for one over another. Which, if any, of these paths reaches closer to the structure of the electron is beside the point: Between de Broglie waves and multiple candidate physical models, the status of space independent properties in local realist field ontologies is sufficiently secure for the purpose of the present paper, which is to offer an alternative to the widespread conflation of Bell violations with "spooky" action at a distance, without merely shifting the explanatory burden to some other equally counterintuitive and/or exotic metaphysical idea(s).

5. Conclusions

Bell's Theorem rests entirely on local causality, but this concept does not apply to fields. Bell Inequalities were violated under strictly local interactions in a field model compatible with special relativity. While not itself a candidate local realist physical theory, the model in Section 3.1 shows that local realist field ontologies are not ruled out by the existence of Bell correlations in nature. Einstein's demand for a physically meaningful rendition of nonlocal quantum phenomena was met, not by rejecting quantum theory, but by considering it from the local realist field point of view he advocated: QED was then seen as a physically coherent theory not an inherently mysterious one.

The only "conflict" between quantum mechanics and relativity is because lightcone causal analysis effectively presumes a particle ontology, whereas the spacetime geometry itself is independent of all ontological concepts. This work offers a coherent alternative to such entrenched metaphysical assumptions while also yielding the empirical prediction of an observable range-dependent effect on the coherence time of Bell states, which can be tested with current experimental capabilities.

Funding

This research received no external funding.

Conflict of interest

The author declares that they have no competing interests.

Data availability statement

All data supporting the findings of this publication are available within this article.

Additional information

Received: 19 February 2026

Accepted: 10 June 2026

Published: 26 June 2026

Academia Quantum papers should be cited as *Academia Quantum 2026*, ISSN 3064-979X, https://doi.org/10.20935/AcadQuant8384. The journal's official abbreviation is *Acad. Quant*.

Publisher's note

Academia.edu Journals stays neutral with regard to jurisdictional claims in published maps and institutional affiliations. All claims expressed in this article are solely those of the authors and do not necessarily represent those of their affiliated organizations, or those of the publisher, the editors and the reviewers. Any product that may be evaluated in this article, or claim that may be made by its manufacturer, is not guaranteed or endorsed by the publisher.

Copyright

© 2026 copyright by the author. This article is an open access article distributed under the terms and conditions of the Creative Commons Attribution (CC BY) license (https://creativecommons.org/licenses/by/4.0/).

References

1. Hensen B, Bernien H, Dréau AE, Reiserer A, Kalb N, Blok MS, et al. Loophole-free Bell inequality violation using electron spins separated by 1.3 kilometres. Nature. 2015; 526 (7575): 682–6. doi: 10.1038/nature15759

2. Giustina M, Versteegh MAM, Wengerowsky S, Handsteiner J, Hochrainer A, Phelan K, et al. Significant-loophole-free test of Bell's theorem with entangled photons. Phys Rev Lett. 2015; 115 (25): 250401. doi: 10.1103/PhysRevLett.115.250401

3. Shalm LK, Meyer-Scott E, Christensen BG, Bierhorst P, Wayne MA, Stevens MJ, et al. Strong loophole-free test of local realism. Phys Rev Lett. 2015; 115 (25): 250402. doi: 10.1103/PhysRevLett.115.250402

4. Aspect A, Grangier P, Roger G. Experimental realization of Einstein-Podolsky-Rosen-Bohm *gedankenexperiment*: a new violation of Bell's inequalities. Phys Rev Lett. 1982; 49 (2): 1804–7. doi: 10.1103/PhysRevLett.49.91

5. Ou ZY, Pereira SF, Kimble HJ, Peng KC. Realization of the Einstein-Podolsky-Rosen paradox for continuous variables. Phys Rev Lett. 1992; 68 (25): 3663–6. doi: 10.1103/PhysRevLett.68.3663

6. Tittel W, Brendel J, Zbinden H, Gisin N. Violation of Bell inequalities by photons more than 10 km apart. Phys Rev Lett. 1998; 81 (17): 3563–6. doi: 10.1103/PhysRevLett.81.3563

7. Żukowski M, Brukner Č. Quantum non-locality—it ain't necessarily so. arXiv. 2014. doi: 10.48550/arXiv.1501.04618

8. Blaylock G. The EPR paradox, Bell's inequality, and the question of locality. Am J Phys. 2010; 78 (1): 111–20. doi: 10.1119/1.3243279

9. Jarrett J. On the physical significance of the locality conditions in the Bell arguments. Noûs. 1984; 18: 569–89. doi: 10.2307/2214878

10. Drummond B. Understanding quantum mechanics: a review and synthesis in precise language. Open Phys. 2019; 17: 390–437. doi: 10.1515/phys-2019-0045

11. Norsen T. Bell locality and the nonlocal character of nature. Found Phys Lett. 2006; 19: 633–55. doi: 10.1007/s10702-006-1055-9

12. Norsen T. Local causality and completeness: Bell vs. Jarrett. Found Phys. 2009; 39: 273–94. doi: 10.1007/s10701-009-9281-1

13. Norsen T. Bell's concept of local causality. Am J Phys. 2011; 79: 1261–75. doi: 10.1119/1.3630940

14. Berkovitz J. Action at a distance in quantum mechanics. In: Zalta EN, Nodelman U, editors. The Stanford encyclopedia of philosophy. Spring 2023 ed. Stanford, CA, USA: Stanford University; 2007.

15. Healey R, Gomes H. Holism and nonseparability in physics. In: Zalta EN, editor. The Stanford encyclopedia of philosophy. Spring 2022 ed. Stanford, CA, USA: Stanford University; 2022.

16. Bohm D. A suggested interpretation of the quantum theory in terms of hidden variables. I. Phys Rev. 1952; 85 (2): 166–79. doi: 10.1103/PhysRev.85.166

17. Drezet A. Whence nonlocality? Removing spooky action at a distance from the de Broglie–Bohm pilot-wave theory using a time-symmetric version of de Broglie double solution. Symmetry. 2024; 16 (1): 8. doi: 10.3390/sym16010008

18. Wharton K, Price H. Dispelling the quantum spooks: a clue that Einstein missed? In: Chamcham K, Silk J, Barrow JD, Saunders S, editors. Time of nature and the nature of time. Boston studies in the philosophy and history of science. Vol. 326. Cham, Switzerland: Springer International Publishing; 2017.

19. Peres A. Unperformed experiments have no results. Am J Phys. 1978; 46 (7): 745–7. doi: 10.1119/1.11393

20. Everett H. "Relative state" formulation of quantum mechanics. Rev Mod Phys. 1957; 29: 454–62. doi: 10.1103/RevModPhys.29.454

21. Rauch D, Handsteiner J, Hochrainer A, Gallicchio J, Friedman AS, Leung C, et al. Cosmic Bell test using random measurement settings from high-redshift quasars. Phys Rev Lett. 2018; 121 (8): 080403. doi: 10.1103/PhysRevLett.121.080403

22. Feynman RP, Leighton RB, Sands M. Electromagnetic mass. In: Feynman RP, Leighton RB, Sands M, editors. The Feynman lectures on physics. Vol. II. Reading, MA, USA: Addison-Wesley Pub. Co.; 1965.

23. Kerner EH. The theory of action at a distance in relativistic particle dynamics: a reprint collection. International science review series. Vol. 11. New York, NY, USA: Gordon and Breach; 1972.

24. Chernitskii AA. Concept of unified local field theory and nonlocality of matter. arXiv. 2001. doi: 10.48550/arXiv.quant-ph/0102101

25. Khrennikov AA. Prequantum classical statistical field theory: fundamentals. In: Proceedings of the AIP Conference Proceedings. International Conference on Advances in Quantum Theory; 14–17 June 2010; Vaexjoe, Sweden. 2010.

26. Einstein A. Physics and reality. J Franklin Inst. 1936; 221 (3): 349–82. doi: 10.1016/S0016-0032(36)91047-5

27. Schilpp PA. Albert Einstein: philosopher–scientist. Evanston, IL, USA: Open Court Publishing; 1949. p. 1–94, 665–88.

28. Einstein A, Born M. The Born–Einstein letters, 1916–1955: friendship, politics and physics in uncertain times. Born I, translator. London, UK: Macmillan; 1971. [Letter of 3 March 1948, p. 155.]

29. Clauser JF, Horne MA, Shimony A, Holt RA. Proposed experiment to test local hidden-variable theories. Phys Rev Lett. 1969; 23 (15): 880–4. doi: 10.1103/PhysRevLett.23.880

30. Redhead M. Incompleteness, nonlocality and realism. Oxford, UK: Oxford University Press; 1987.

31. Einstein A, Podolsky B, Rosen N. Can quantum-mechanical description of physical reality be considered complete? Phys Rev. 1935; 47: 777–80. doi: 10.1103/PhysRev.47.777

32. Feynman RP. Space-time approach to quantum electrodynamics. Phys Rev. 1949; 7: 769–89. doi: 10.1103/PhysRev.76.769

33. Bell JS. On the Einstein Podolsky Rosen paradox. Physics. 1965; 1: 195–200. doi: 10.1103/PhysicsPhysiqueFizika.1.195

34. Wood CJ, Spekkens RW. The lesson of causal discovery algorithms for quantum correlations: causal explanations of Bell-inequality violations require fine-tuning. New J Phys. 2015; 17 (3): 033002. doi: 10.1088/1367-2630/17/3/033002

35. Davisson CJ. The diffraction of electrons by a crystal of nickel. Bell Syst Tech J. 1928; 7 (1): 90–105. doi: 10.1002/j.1538-7305.1928.tb00342.x

36. Jackson JD. Radiation damping, self-fields of a particle, scattering and absorption of radiation by a bound system. In: Jackson JD, editor. Classical electrodynamics. New York, NY, USA: John Wiley and Sons; 1962.

37. Konopinski EJ. Electromagnetic fields and relativistic particles. New York, NY, USA: McGraw-Hill; 1981.

38. Van Flandern T. The speed of gravity—what the experiments say. Phys Lett A. 1998; 250: 1–11. doi: 10.1016/S0375-9601(98)00650-1

39. Carlip S. Aberration and the speed of gravity. Phys Lett A. 2000; 267: 81–7. doi: 10.48550/arXiv.gr-qc/9909087

40. Kaiser D. Drawing theories apart: the dispersion of Feynman diagrams in postwar physics. Chicago, IL, USA: University of Chicago Press; 2005.

41. Feynman RP. Electrons and their interactions. In: Feynman RP, editor. QED: the strange theory of light and matter. Princeton, NJ, USA: Princeton University Press; 1985.

42. 't Hooft G. The cellular automaton interpretation of quantum mechanics. Cham, Switzerland: Springer International Publishing; 2014.

43. Laidlaw A. An unspeakable mechanism. Int J Adv Res Phys Sci. 2018; 5 (6): 10–28.

44. Szańkowski P, Cywiński Ł. The dynamics of two entangled qubits exposed to classical noise: role of spatial and temporal noise correlations. Quantum Inf Process. 2015; 14 (9): 3367–97. doi: 10.1007/s11128-015-1044-7

45. Throckmorton R, Barnes E, Das Sarma S. Environmental noise effects on entanglement fidelity of exchange-coupled semiconductor spin qubits. Phys Rev B. 2017; 95 (8): 085405. doi: 10.1103/PhysRevB.95.085405

46. Bogdanovic S, van Dam SB, Bonato C, Coenen LC, Zwerver AMJ, Hensen B, et al. Design and low-temperature characterization of a tunable microcavity for diamond-based quantum networks. Appl Phys Lett. 2017; 110 (17): 171103. doi: 10.1063/1.4982168

47. Yin J, Ren JG, Lu H, Cao Y, Yong HL, Wu YP, et al. Quantum teleportation and entanglement distribution over 100-kilometre free-space channels. Nature. 2012; 488 (7410): 185–8. doi: 10.1038/nature11332

48. de Broglie L. Recherches sur la théorie des quanta. Ann Phys. 1925; 10 (3): 22–128. doi: 10.1051/anphys/192510030022

49. Wigner E. On unitary representations of the inhomogeneous Lorentz group. Ann Math. 1939; 40 (1): 149–204. doi: 10.2307/1968551

50. Kim YS. Internal space-time symmetries of massive and massless particles and their unification. Nucl Phys B Proc Suppl. 2001; 102: 369–76. doi: 10.1016/S0920-5632(01)01581-X

51. Battey-Pratt EP, Racey TJ. Geometric model for fundamental particles. Int J Theor Phys. 1980; 19 (6): 437–75. doi: 10.1007/BF00671608