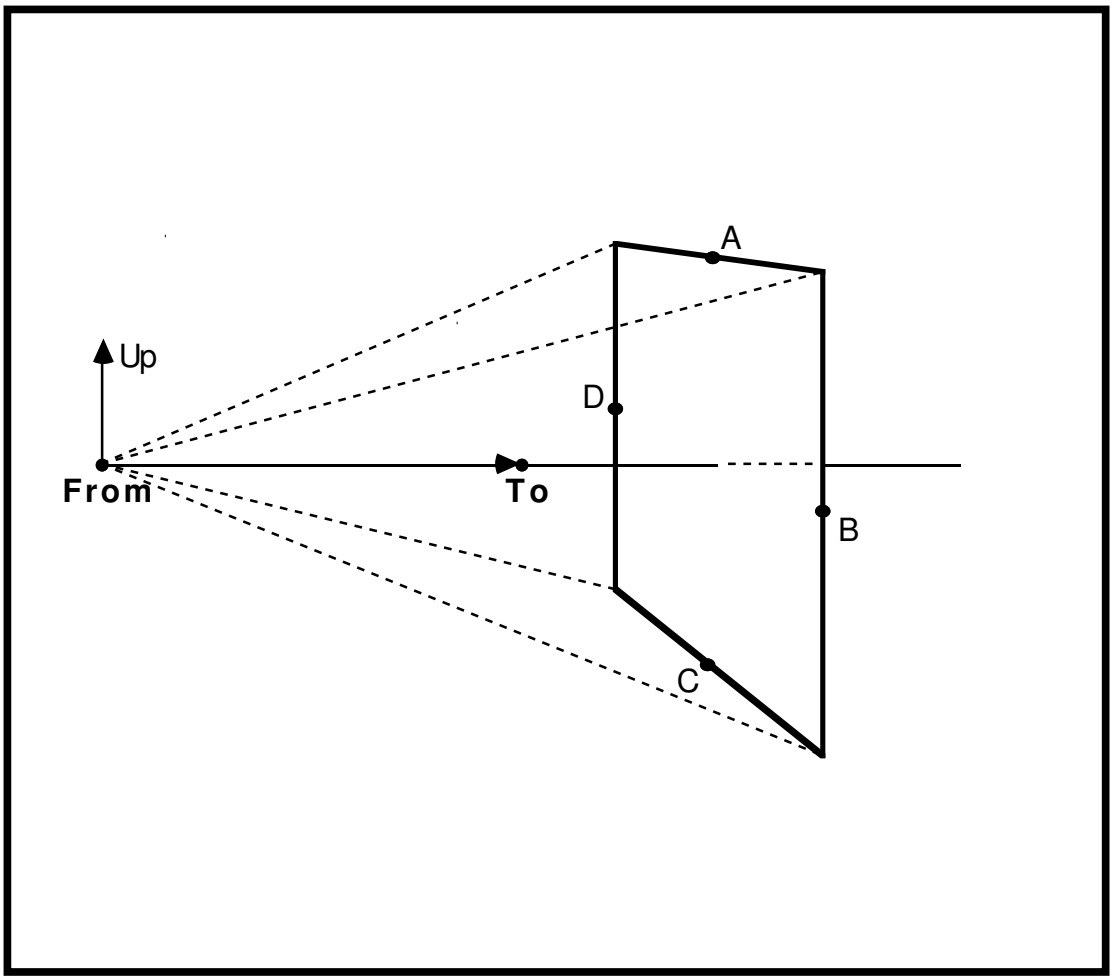
A
Up
D
From
To
B
C