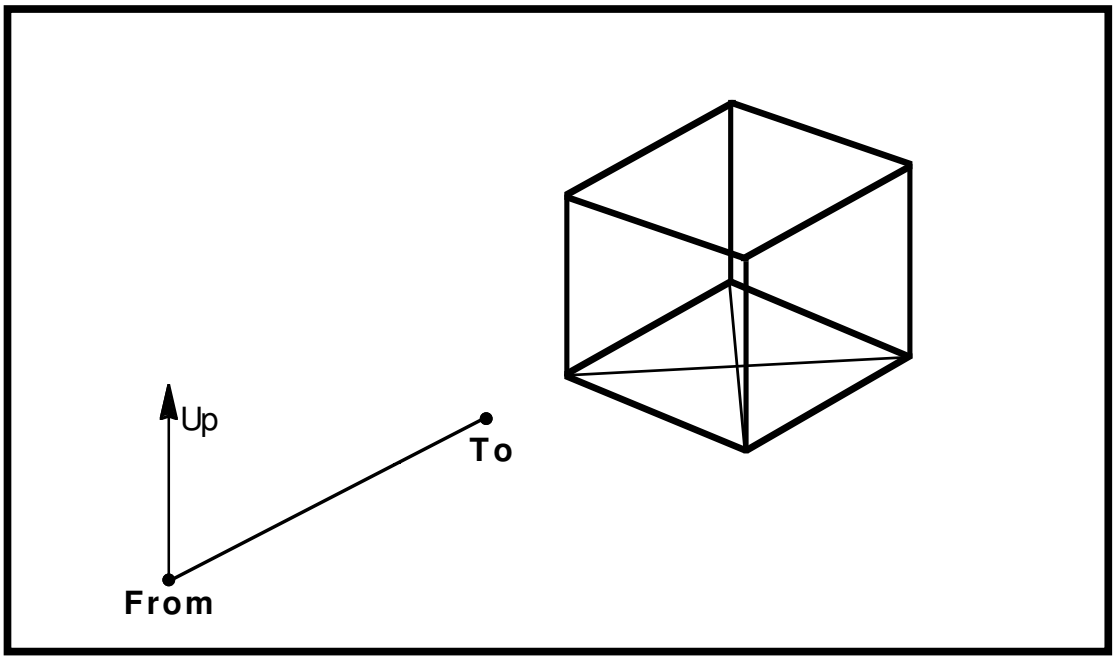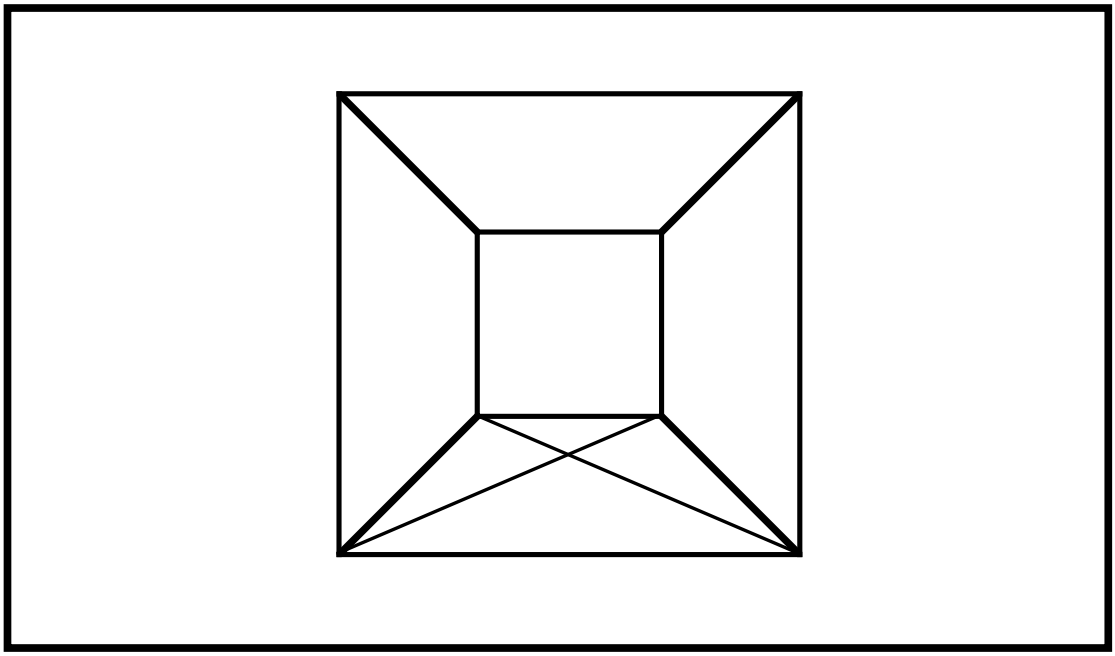
Up
To
From